M-402-99R3

Starting with Serial Number M-4500

Supersedes M-402-99R2

Trailer Mounted
Maintenance Distributor

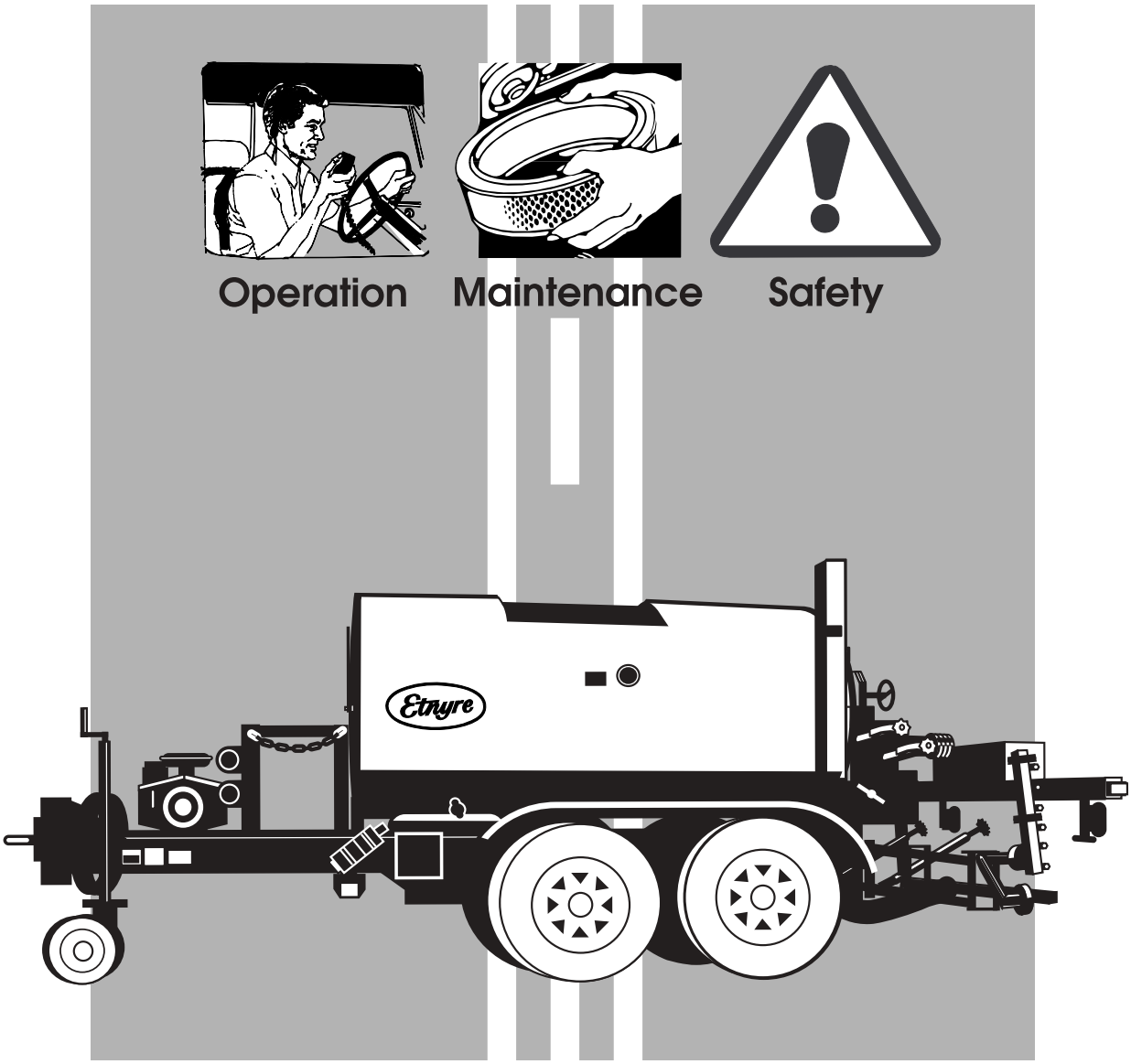

E. D. ETNYRE & CO. 1333 S. Daysville Road, Oregon, Illinois 61061

Phone: 815/732-2116 or 800/995-2116 • Fax: 800-521-1107 • www.etnyre.com

M-402-99R3
Maintenance Distributor
Operation, Maintenance and Safety Manual
for units with Basic Controls

WARRANTY

E. D. Etnyre Co. warrants to the original Purchaser, it's new product to be free from defects in material and workmanship for a period of twelve (12) months after date of delivery to original Purchaser. The obligation of the Company is limited to repairing or replacing any defective part returned to the Company and will not be responsible for consequential damages or any further loss by reason of such defect.

The company excludes all implied warranties of merchantability and fitness for a particular purpose. There are no warranties, express or implied, which extend beyond the description of the goods contained in this contract.

This warranty does not obligate the Company to bear the cost of machine transportation in connection with the replacement or repair of defective parts, nor does it guarantee repair or replacement of any parts on which unauthorized repairs or alterations have been made or for components not manufactured by the Company except to the extent of the warranty given by the original Manufacturer.

This warranty does not apply to:

(1) Normal start-up services, normal maintenance services or adjustments usually performed by the selling dealer, factory service representative or customer personnel.

(2) Any product manufactured by E. D. Etnyre Co. purchased or subjected to rental use.

(3) Any product or part thereof which shows improper operation, improper maintenance, abuse, neglect, damage or modification after shipment from factory.

(4) Any product or part thereof damaged or lost in shipment. Inspection for damage should be made before acceptance or signing any delivery documents releasing responsibility of the delivering carrier.

This warranty and foregoing obligations are in lieu of all other obligations and liabilities including negligence and all warranties of merchantability or otherwise, express or implied in fact or by law.

E. D. Etnyre & Co., Oregon, Illinois 61061-9778
1333 South Daysville Road Phone: 800-995-2116 Fax: 800-521-1107 www.etnyre.com

WARNING

Do not use this machine for any operation which is not described in this manual.

If you have any questions about operation of this machine, contact the Etnyre Service Department at 1-800-995-2116 or 1-815-732-2116

Operations that are not approved could cause serious injury or death.

CALIFORNIA

Proposition 65 WARNING

Diesel engine exhaust and some of its constituents are known to the State of California to cause cancer, birth defects, and other reproductive harm.

Please note this warning and remember -

Always start and operate the engine in a well ventilated area;

If in an enclosed area, vent the exhaust to the outside;

Do not modify or tamper with the exhaust system.

WARNING

Fluoroelastomer Handling

Some O-rings and seals used in this vehicle are made from fluoroelastomers, When used under design conditions, fluoroelastomers do not require special handling. However, when fluoroelastomers are heated to temperatures beyond their design temperature (around 600º Fahrenheit), decomposition may occur with the formation of hydrofluoric acid. Hydrofluoric acid can be extremely corrosive to human tissue if not handled properly.

A degraded seal may appear as a charred or black sticky mass, Do not touch either the seal or the surrounding equipment without wearing neoprene or PVC gloves if degradation is suspected. Wash parts and equipment with 10% lime water (calcium hydroxide solution) to neutralize any hydrofluoric acid.

If contact with the skin occurs, wash the affected areas immediately with water. Then rub a 2.5 calcium gluconate gel into the skin until there is no further irritation, while seeking prompt medical attention.

Note to Physicians: For advice or treatment of HF burns, call the DuPont Medical Emergency number, 1-800-441-3637

Table Of Contents

List Of Illustrations

Warning And Instruction Plates

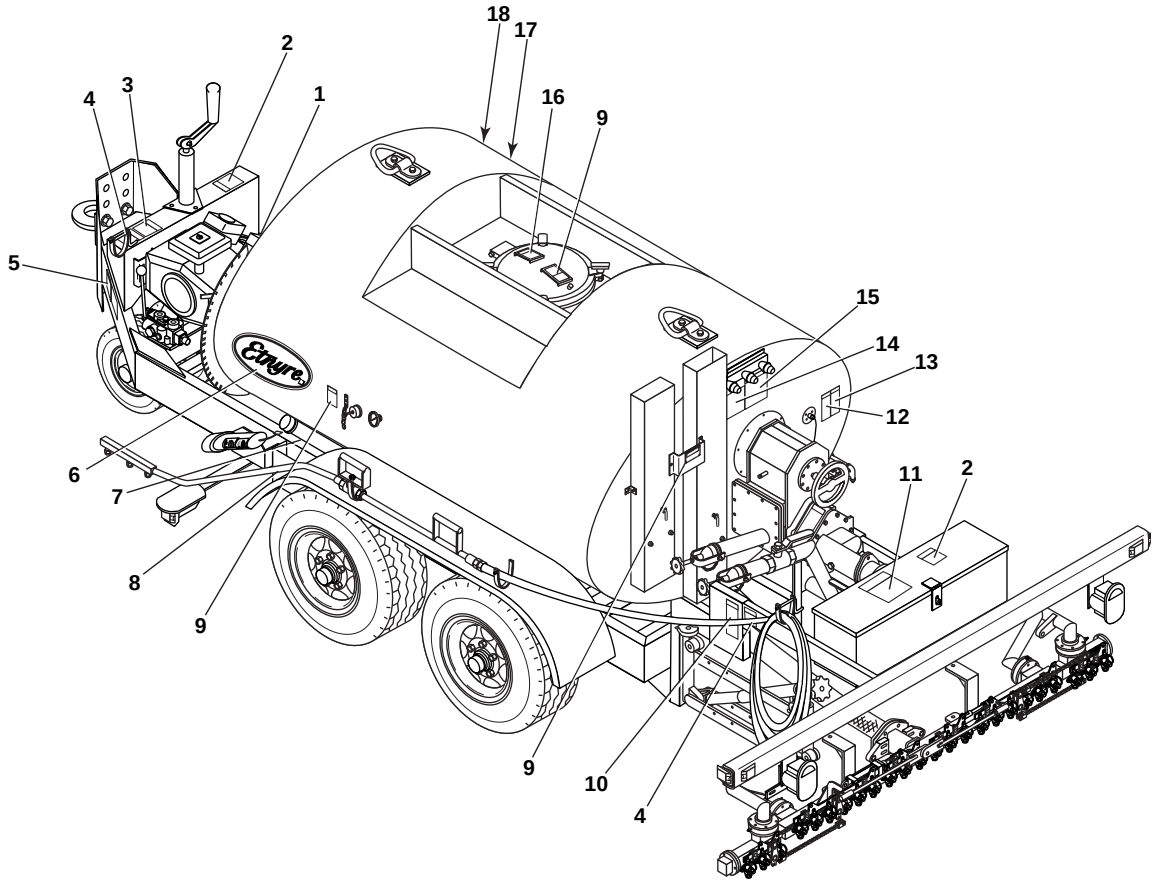

REF	PART NO.	QTY	DESCRIPTION	REF	PART NO.	QTY	DESCRIPTION
1	3830529	1	Plate-Warning Safety Chain	13	3390637	1	Tag-Warning, Don’t Mix Asphalts
2	3390678	1	Decal: Warning, “Read Manuals”	14	3390686	1	Decal: Warning, Burner, General
3	3390682	1	Decal: Caution, Before Starting	15	3390540	1	Plate-Directions, LPG Burner
4	3390683	2	Decal-Caution, Shields	16	3390679	1	Decal: Warning, Manhole
5	2690082	1	Name Plate-Maint Unit Brass	17	3360180	1	Decal: Fill W/Diesel Fuel Only
6	3390191	2	Decal-Oval, Etnyre	18	3360653	1	Plate-Fill W/Gasoline Only
7	3390605	1	Plate-Instr. Hydraulic Oil Spec				
8	2790026	1	Nameplate Transport				
9	3390684	3	Plate-Caution, Hot Surface				
10	3390680	1	Decal: Warning, Fill Cap				
11	3390685	1	Decal: Warning, Safety Hazards				
12	3390636	1	Plate-Warning, Burner				

General Safety Instructions

The operation of a bituminous distributor normally requires handling of liquid products at elevated temperatures. Additionally, these liquids may be of a volatile nature. A heating system is supplied to raise or maintain the product temperature, and these systems use highly combustible fuels. As with any type of construction equipment, there are certain hazards associated with improper or careless operation.

Safety warnings have been provided to call attention to any potentially hazardous situation that may cause property damage, personal injury or death to the operator or bystanders. These safety warnings are identified by the following warning symbols.

- The **DANGER** symbol alerts you to immediate hazards which **WILL** result in severe personal injury or death.
- The **WARNING** symbol alerts you to hazards which **MAY** cause severe personal injury or death.

You will also find **CAUTIONS** and **NOTES** throughout the manual.

- A **CAUTION** alerts you to procedures that may result in damage to the equipment if not followed properly.
- A **NOTE** provides general information that the operator should be aware of when performing an operation.

⚠ DANGER

To avoid an extreme fire hazard or explosion, NEVER use gasoline as fuel in low pressure or generating burners.

⚠ WARNING

A fully charged dry chemical type fire extinguisher must be within easy reach whenever the burners are operating or there is an open flame near the distributor. The minimum capacity of the fire extinguisher should be 10 pounds.

To prevent an explosion or fire hazard: Position the unit broadside to the wind to prevent volatile fumes from drifting toward the burners.

To prevent an explosion or fire hazard: Do not operate the burners if the tank is damaged or leaking

⚠ WARNING

To prevent an explosion or fire hazard: Ensure that the burners are extinguished before removing any material from the tank in any manner. Liquid petroleum (LP) burners can support a flame for several minutes after the fuel supply is turned off.

To prevent an explosion: Do not operate the burners when the vehicle is unattended, when the vehicle is in motion, or with the vehicle in a confined area.

To prevent an explosion or fire hazard: When the burners go out, shut off the fuel supply to both burners and allow the flues to ventilate for at least 3 minutes before re-lighting the burners.

General Safety Instructions

WARNING

To prevent an explosion or fire hazard: Do not heat the material beyond the manufacturer's recommended temperature.

To prevent an explosion or fire hazard: Keep burning cigarettes or other sources of combustion away from manholes and overflow vents.

To prevent possible hand or facial burns: Always light the inside burner first. Do not reach across a lit burner to light or re-light the inside burner. Shut off the outside burner before lighting the inside burner.

To prevent possible burns: Always use a torch to light the burners. Never attempt to light the burners using a match or pocket lighter.

To prevent an explosion or fire hazard: Check the tank vent to insure that it is free from obstruction before lighting the burners.

To prevent an explosion or fire hazard: Do not operate the burners withe manhole open or open the manhole while the burners are in operation.

To prevent possible burns to operators or bystanders, or possible equipment damage, do not start any operation if any control settings are unknown.

To prevent possible burns from leaking material: Be sure all pipe, cap and hose connections are secure before opening valves.

To prevent possible burns from hot asphalt spray: Do not stand, or allow anyone to stand, where accidental opening of a valve may cause contact with hot asphalt.

WARNING

To prevent an explosion or fire hazard: Keep area free of all sources of combustion when spraying.

To prevent possible burns from foaming or violent eruption, do not load tank with material temperature over 200ºF if water or condensation is present in tank, or if emulsion was used in the previous load. Do not heat material over 200ºF if moisture or emulsion is present in tank.

To prevent an explosion or fire hazard: Eliminate sparks from engine exhaust.

To prevent burns from hot asphalt when handspraying: Hold the handspray gun in proper position and watch for other people.

To prevent burns: Always wear insulated gloves when handling spray bar sections or hoses.

To prevent severe injury from becoming entangled in machinery: Stand clear of rotating drives.

To prevent possible injury: Always open the manhole cover slowly. Pressure build up in the tank may cause the cover to burst open.

To prevent possible fire hazards, burns or falls: Keep the unit clean for safe operation.

To prevent possible burns from material overflow: Allow sufficient space in the tank for expansion of the material when heating

Before removing the fill line cap, make certain that the asphalt pump is turning and the suction valve is closed.

WARNING

To prevent possible personal injury: Do not load the vehicle beyond the GVWAR or GVWR. The maximum load volume must be calculated based on material density

To prevent possible burns: Use extreme caution when using a torch to heat the pump. Asphalt accumulated around the pump may ignite when heating the pump with a torch

Allowing the burners to operate for a long period of time without circulating can damage the product and create explosive fumes. If product cannot be circulated after fifteen minutes of heating without circulation, the burners should be extinguished for 20 - 30 minutes before re-lighting the burners.

Introduction

Your Etnyre Maintenance Distributor is designed to give you many years of accurate, dependable, and economic service. The following instructions will enable you to receive the maximum performance from your Maintenance Distributor.

The Maintenance Distributor controls are designed for simple operation. They require a minimum of training for proficient usage. The exclusive Etnyre circulating system is designed and built for handling all grades of bituminous materials efficiently.

This manual is provided as a tool to aid personnel in the operation of the Etnyre Maintenance Distributor in a safe and efficient manner, As with any type of construction equipment, there are certain hazards associated with improper or careless operation. The ability to read and understand the instructions in this manual should be a required qualification to become an operator. There are also functions that require a certain amount of physical strength to accomplish. Persons lacking the required strength may not only place themselves in jeopardy, but also others in the vicinity.

This manual covers standard features and options for trailer mounted units with basic controls only. If your unit incorporates custom features, some of the information contained in this manual may not apply. If you have any questions regarding this manual or your unit, contact your Etnyre dealer or the E. D. Etnyre Service Department at 1-800-995-2116.

⚠ CAUTION

Unusually strong electromagnetic interference could cause the electronic controls on this equipment to temporarily malfunction. Test the effect of two way radios and similar equipment while operating in a safe area.

Reporting Safety Defects

If you believe that your vehicle has a defect which could cause a crash, or could cause injury or death, you should immediately inform the National Highway Traffic Safety Administration (NHTSA) in addition to notifying E. D. Etnyre & Co.

If NHTSA receives similar complaints, it may open an investigation; and, if it finds that a safety defect exists in a group of vehicles, it may order a recall and remedy campaign. However, NHTSA cannot become involved in individual problems between you, your dealer, or E. D. Etnyre & Co.

To contact NHTSA, you may either call the Auto Safety Hotline toll free at 1-800-424-9393 (or 336-0123 in the Washington, D.C. area). or write to NHTSA, U.S. Department of Transportation, Washington, DC, 20696. You can also obtain other information about motor vehicle safety from the hotline.

Component Location And Identification

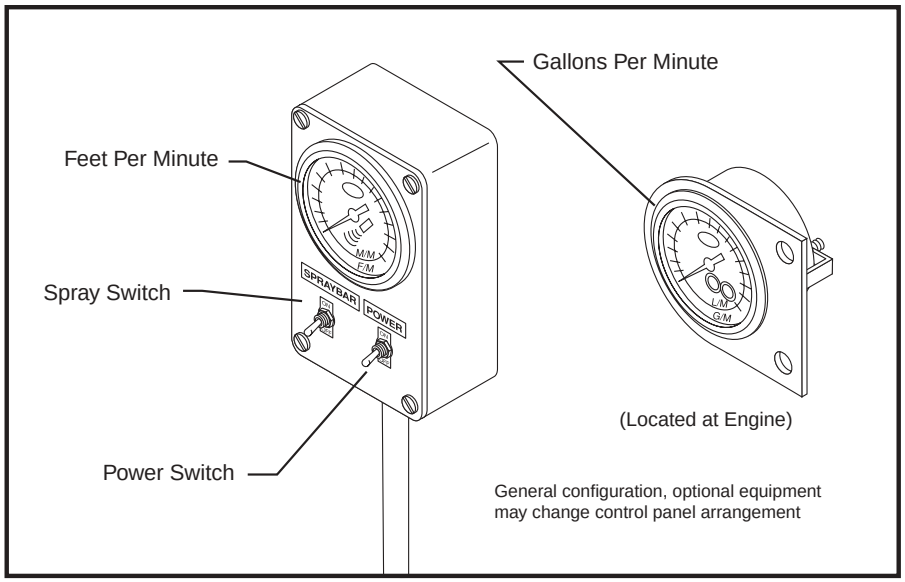

Control Panel

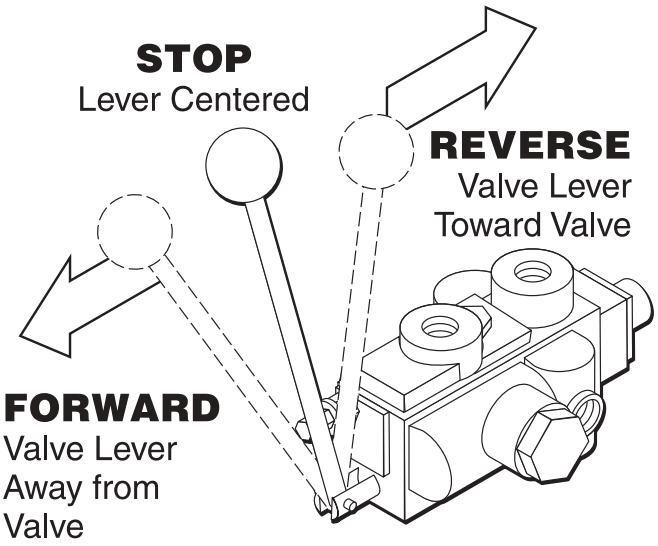

Pump Directional Control Valve

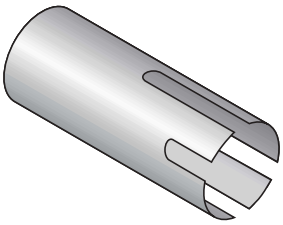

LONG SLOT - CLOSED

SHORT SLOT - CLEAN OUT

COUNTERCLOCKWISE - OPEN

LONG SLOT - CIRCULATE IN BAR

MIDDLE SLOT - TRANSFER

SHORT SLOT - HANDSPRAY

COUNTERCLOCKWISE - CIRC IN TANK

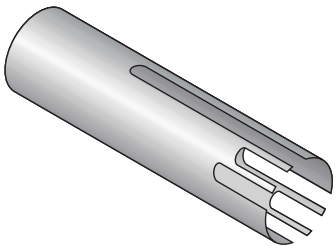

Component Location And Identification

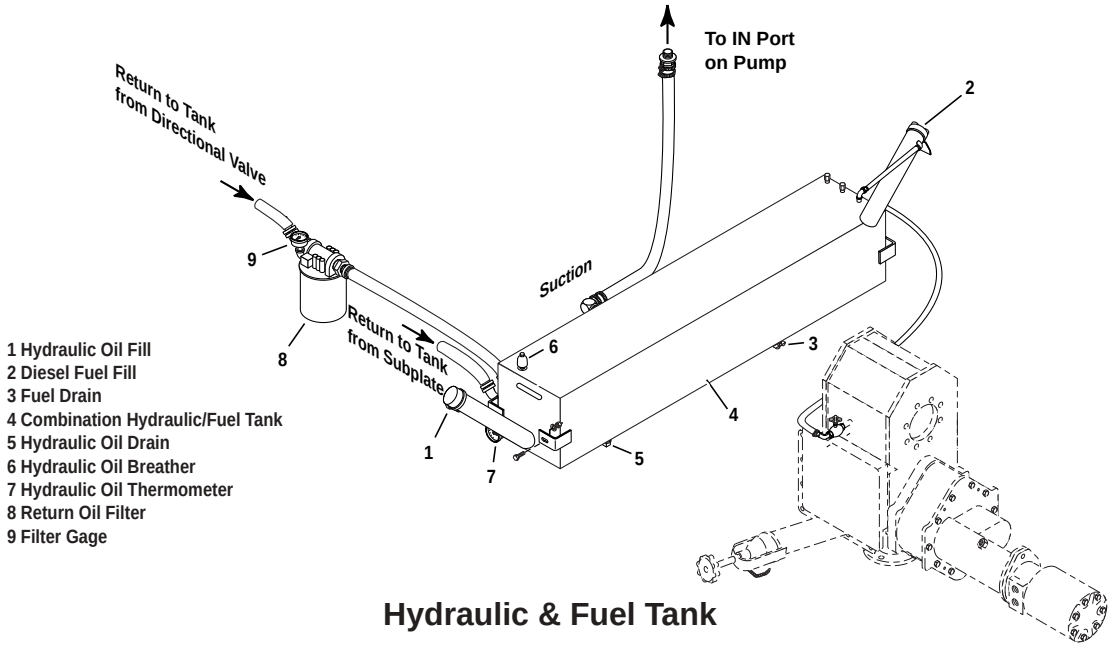

Hydraulic & Fuel Tank

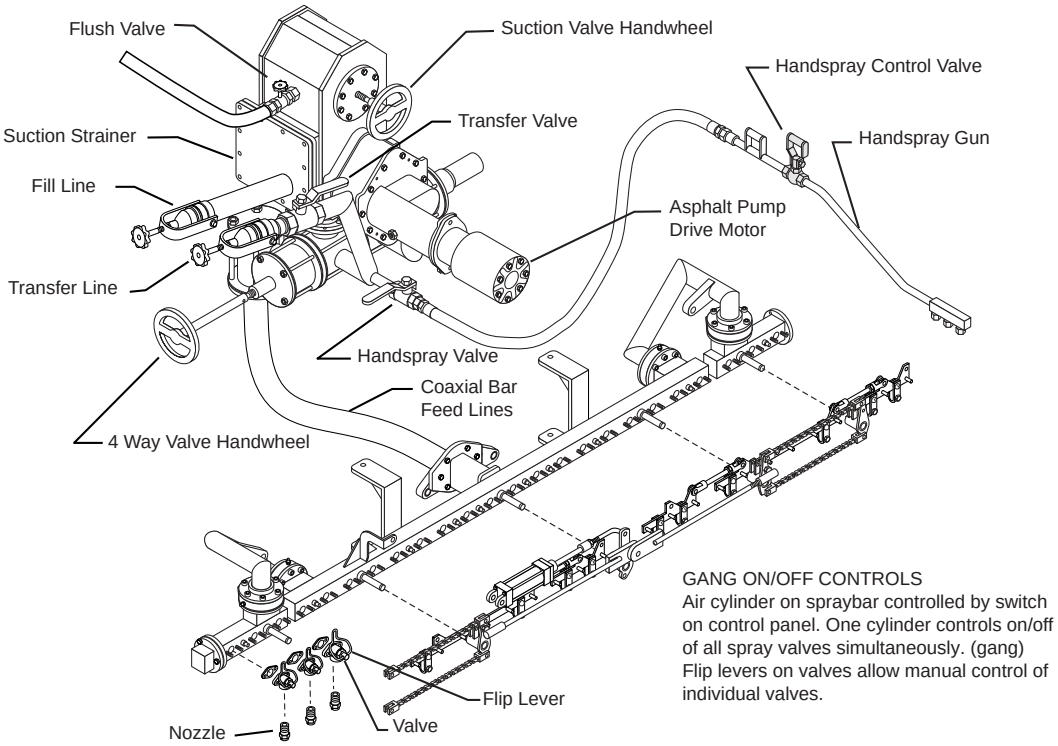

GANG ON/OFF CONTROLS
Air cylinder on spraybar controlled by switch on control panel. One cylinder controls on/off of all spray valves simultaneously. (gang) Flip levers on valves allow manual control of individual valves.

Preparing for Operation

Always refer to the engine owner's manual for engine maintenance information.

The following procedures apply to new or rebuilt units.

1. Inspect the unit for damage that may have occurred during transporting.

2. Check and tighten all fasteners, body tie-down bolts, pipe and circulating line connections, etc. that may have loosened in transit.

3. Check the fluid level in the hydraulic reservoir. The fluid must always be visible in the sight glass.

WARNING

To prevent becoming entangled in machinery remain clear of rotating drives.

Establishing Flow Rate/Ground Speed Ratio

If equipped with radar, use the Etnyre Computator to determine the correct ground speed (feet per minute), the required pump flow rate (gallons per minute) for the desired spray bar length (feet) and the application rate (gallons per square yard).

Using the Etnyre Computator

1. To determine the proper speed and pump discharge, use the Etnyre Computator. On the top scale, find the spray bar length to be used.

2. At the right end of the Computator, grasp the slide in the thumb recess and move the slide until the desired application rate is directly below the spray bar length.

3. Below the desired speed, you will find the necessary pump discharge rate.

Let's do a sample calculation for 12 feet of spray bar at an application rate of 0.3 gallons per sq yd. and a truck speed of 250 fpm. Move the slide to set the .3 directly under the 12 ft. Now you can see that directly below the 250 fpm distributer speed is the required asphalt pump rate of 100 gpm. The reverse side of the computator presents the information in metric units.

4. Select a transmission gear that will provide 250 fpm at 1200 to 1600 rpm of the truck engine.

5. Set the 2 speed motor to the *LO* position.

WARNING

To prevent severe injury from becoming entangled in machinery: Stand clear of rotating drives

WARNING

To prevent possible burns to operators or bystanders, or possible equipment damage, do not start any operation if any control settings are unknown.

CAUTION

To prevent damage to the asphalt pump, do not run pump for more than 5 minutes without bitumen to supply lubrication

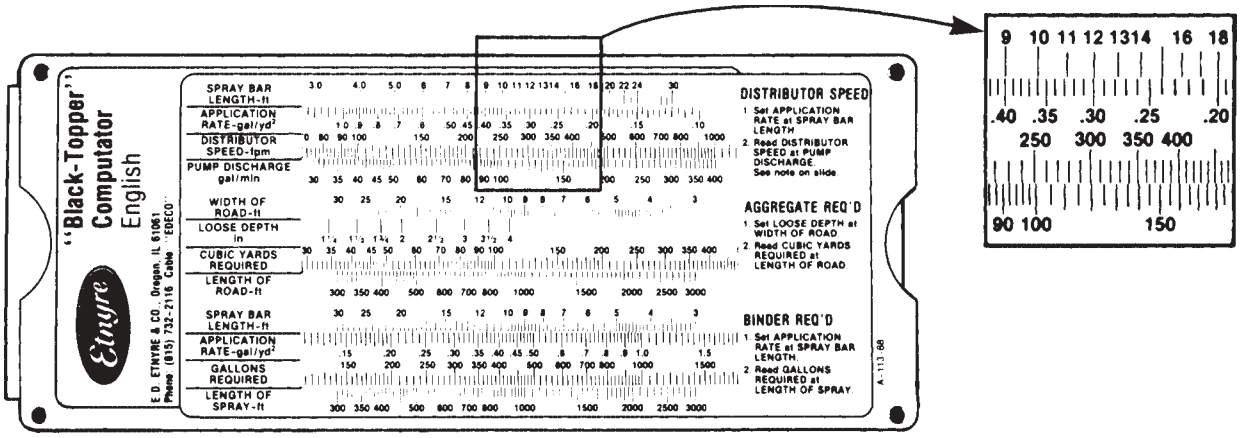

Etnyre Computator

Filling Instructions

General

The Etnyre Maintenance distributor tank has a built in air space, or expansion space, above the “Tank Full” level. This air space is designed to minimize the chance that the tank will overflow if the material in the tank expands due to heating or foaming. The air space should not be used to carry product, The “Tank Full” level is based on the vehicle GVWAR, GVWR and a material density of 7.7 lb./gal. A lower “Tank Full” level must be calculated if a material with a density greater than 7.7 lb./gal is loaded.

WARNING

To prevent possible burns to operators or bystanders, or possible equipment damage, do not start any operation if any control settings are unknown.

WARNING

To prevent possible burns from hot asphalt spray: Do not stand or allow anyone to stand, where accidental opening of a valve may cause contact with hot asphalt.

WARNING

Before removing the fill line cap, make certain that the asphalt pump is turning and the suction valve is closed.

WARNING

To prevent possible personal injury, do not load the vehicle beyond the GVWAR or GVWR. The maximum load volume must be calculated based on material density.

WARNING

To prevent possible burns from leaking material, be sure all pipe, cap, and hose connections are secure before opening valves.

WARNING

To prevent an explosion or fire hazard: Keep burning cigarettes or other sources of combustion away from manholes and overflow vents.

Foaming

If you suspect there may be moisture or emulsion in the tank, Dow-Corning DC-200 additive can be used to reduce foaming if a product being pumped is at a temperature in excess of 200ºF. Additional DC-200 additive may be obtained from E. D. Etnyre & Co. or your Etnyre dealer.

WARNING

To prevent possible burns from foaming or violent eruption, do not load tank with material temperature over 200ºF if water or condensation is present in tank, or if emulsion was used in the previous load. Do not heat material over 200ºF if moisture or emulsion is present in tank.

WARNING

To prevent possible burns from material overflow, allow sufficient space in the tank for expansion of the material when heating.

Mixing Dow-Corning DC-200 Anti Foam Agent

Mix the contents of one can (16 oz.) with one (1) gallon of diesel fuel or kerosene. Add one (1) ounce of this diluted mixture to each 1000 gallons of asphalt. The correct amount may be poured through the manhole. This will assist in reducing foaming, particularly if moisture is present or if an emulsified asphalt was used in a previous load.

If you suspect that there may be moisture in the spray bar or circulating system, the filling operation should be stopped when the tank is no more than 25% full. The product should then be circulated from the tank through the spray bar for a minimum of 2 minutes at a rate of 80 to 110 GPM before continuing the filling operation. After circulating product in the spray bar, suck back the material from the bar and then return to

the loading configuration and continue loading.

If foaming does occur, continue circulating until the foaming stops, and then suck back the product from the spray bar into the tank before continuing the loading operation.

⚠ WARNING

To prevent possible burns, always wear insulated gloves when handling spray bar sections or hoses.

Filling Through the Fill Line

1. Clean suction strainer daily after suckback and flushing operations have been completed. (See Figure 1)

2. Turn the *Burner Control* switches and the *Wash-down/Flushing* switch *Off*.

3. Turn the *Power* switch *On*.

4. Place the *Suction Valve* in the *Closed* position.

5. Place the *Pump Directional valve* in the *Stopped* position.

6. Start the engine and set the speed to idle.

7. Place the *Pump Directional* valve in the *Pump Normal* position, and verify a correct (counterclockwise) rotation of the saphalt pump shaft when viewed from the back of the machine. If this is not correct, call the Etnyre Service Department before proceeding.

8. Place the *4 way valve* in the *Circ in Tank* position.

9. Set all of the valve positions (see Figure 1).

10. Increase the *Circulation Rate* by increasing the engine speed to obtain the desired rate.

A pump rate of 75 GPM is recommended to begin the loading operation. The pump rate can be increased at any time after loading has begun. Depending on material viscosity, as the loading rate is increased, the asphalt pump may cavitate. When this happens, the pump will make a distinctive sound, easily recognized with experience. Short periods of operation while the pump is cavitating will not damage the pump but you should not operate the pump in this condition for extended periods. Higher speeds will not load thick material faster. Light materials or materials at spraying temperature, may be loaded at faster pump speeds.

Ensure that all connections between the distributor and the supply source are tight to prevent asphalt leaks. Air leaks will reduce the vacuum and slow down the filling operation. This system is designed to suck asphalt through the fill line. Do not pressurize the fill line with an external pump.

11. Open the valve at the supply source and monitor the tank gage. When the gage indicates full, close the supply valve. (See Figure 2)

12. After closing the supply valve, while the asphalt pump is turning, disconnect the hose at the supply source and elevate the hose to allow maximum drainage to the fill line. Allow the pump to continue turning while the hose is disconnected from the fill line and the fill line cap is replaced and secured.

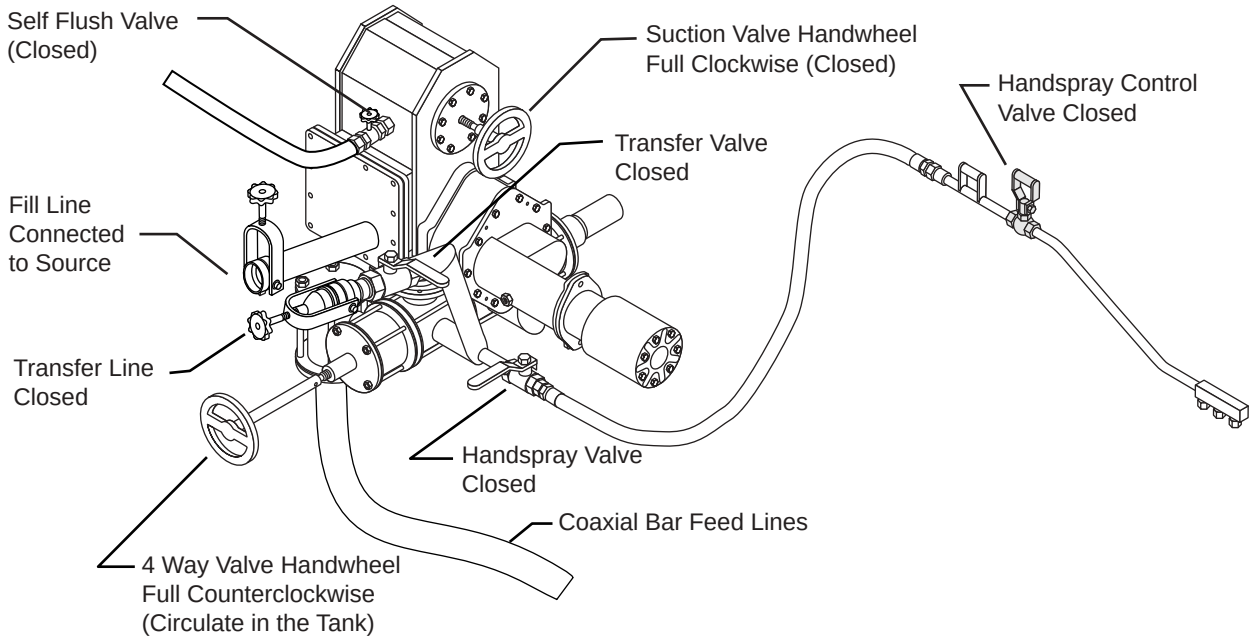

Figure 1. Valve Positions for Filling

Filling through the Manhole

WARNING

To prevent possible injury, always open the manhole cover slowly. Pressure build up in the tank may cause the cover to burst open.

CAUTION

To prevent damage to equipment, always use a manhole strainer when filling through the manhole.

1. Turn the *Power* switch *Off* to prevent accidents.

Note: Ensure that all connections are tight to prevent asphalt leaks.

2. Open the valve at the supply source and monitor the tank gage.

3. When the tank gage indicates full, close the supply valve. (See Figure 2)

Using the Measuring Stick

The measuring stick
is only accurate when the tank is level.

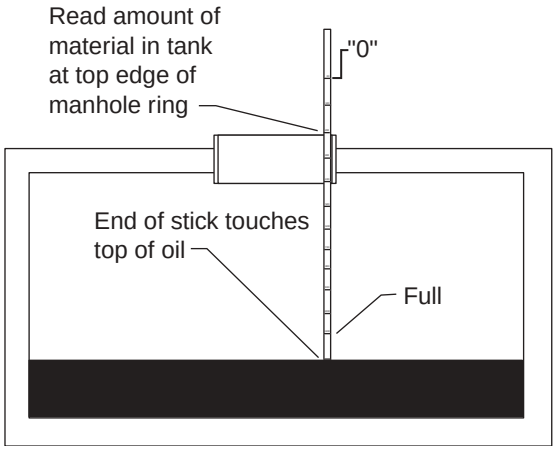

Figure 2. Using the Measuring Stick

OPERATION

Circulating Instructions

Circulating Product

WARNING

To prevent possible burns to operators or bystanders, or possible equipment damage, do not start any operation if any control settings are unknown

WARNING

To prevent an explosion or fire hazard: Keep burning cigarettes or other sources of combustion away from manholes and overflow vents.

WARNING

To prevent possible burns from leaking material, be sure all pipe, cap, and hose connections are secure before opening valves.

WARNING

To prevent possible burns from hot asphalt spray: Do not stand or allow anyone to stand, where accidental opening of a valve make cause contact with hot asphalt.

WARNING

Allowing the flue burners to operate for a long period of time without circulating can damage the product and create explosive fumes. If product cannot be circulated after fifteen minutes of heating without circulation, the burners should be extinguished for 20-30 minutes before re-lighting the burners.

WARNING

Before removing the fill line cap, make certain that the asphalt pump is turning and the suction valve is closed.

WARNING

To prevent possible burns, use extreme caution when using a torch to heat the pump. Asphalt accumulated on and around the pump may ignite when heating the pump with a torch.

WARNING

To prevent an explosion: Do not operate the burners when the vehicle is unattended, when the vehicle is in motion, or with the vehicle in a confined area.

Circulating Product in the Tank

1. Set all of the valve positions (see Figure 3).
2. Turn the *Burner Control* switches and the *Washdown/Flushing* switch *Off*.
3. Turn the *Master Power* switch *On*.
4. Place the *Suction Valve* in the *Open* position.
5. Place the *Pump Directional* valve in the *Stopped* position.
6. Start the engine and set the speed to idle.
7. Place the *Pump Direction* valve in the *Pump Normal* position and verify a correct (counter clockwise) rotation of the asphalt pump shaft when viewed from the back of the machine. If this is not correct call the Etnyre Service De partment before proceeding.
8. Place the *4 Way Valve* in the *Circ in Tank* position.
9. Increase the *Circulation Rate* by increasing the engine speed to obtain the desired rate.

A pump rate of 100 to 150 GPM is recommended for heating operations.

If the pump fails to quickly regain its speed, close the suction valve and put a small amount of diesel fuel into the fill line to free up the pump or use a hand held torch to warm the pump.

If the product is too cold to be circulated, some heating with the burners will be needed to increase the temperature enough to be able to start circulating. Even if the product in the tank is at or near spraying temperature, a cold pump may chill the product sufficiently enough to lock up the pump. If this occurs, heat may

be applied to the pump with a hand held torch.

Moving the distributor back and forth while the burners are off will allow the hot product to mix with the cooler product. This should decrease the time required to bring the product temperature up enough to start circulating. Once circulation has been established, the heating can continue without interruption.

Refer to “Heating Product” for instruction on the operation of your particular type of burners.

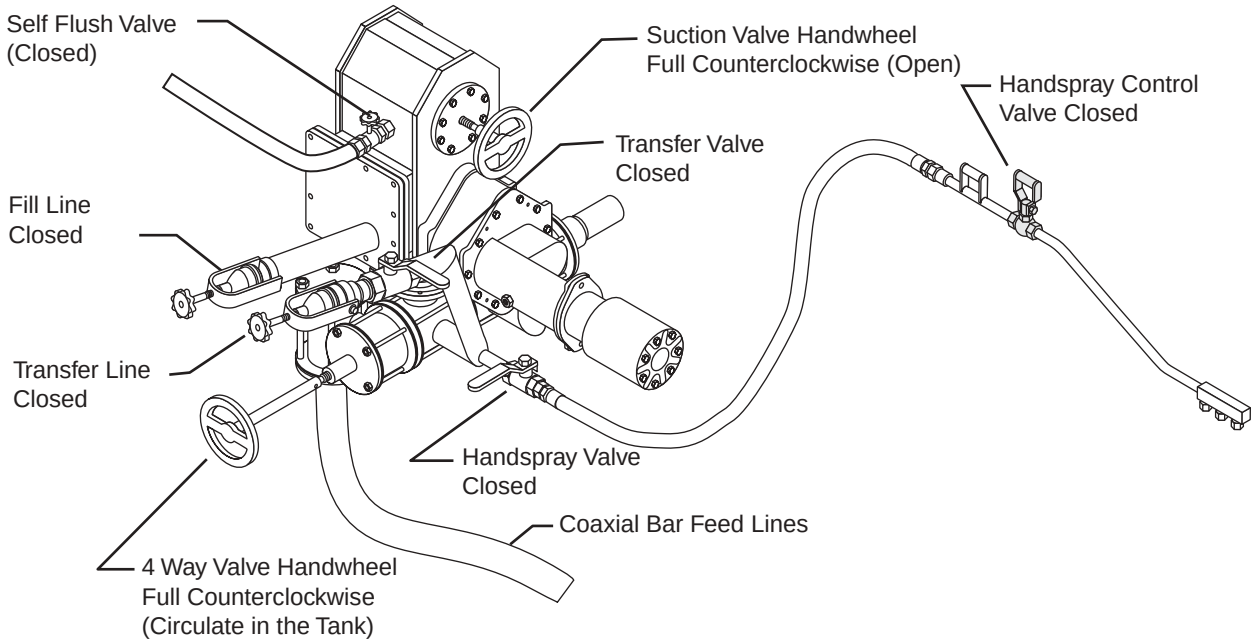

Figure 3. Valve Positions for Circulating in the Tank

Circulating Product in the Bar

Perform the procedure for circulating in the tank first. Then place the *4-way Valve* in the *Circulate in Bar* position. Circulate product long enough to ensure removal of all air from the bar and to heat the spray bar valves sufficiently. (See Figure 4)

Material will circulate in the bar ends whether the wings are folded or extended.

⚠ CAUTION

To prevent excessive pressure in the spray bar, the asphalt pump speed should not exceed 160 gpm while circulating in the bar.

⚠ WARNING

To prevent possible burns, allow the bar feed hose to warm to asphalt spraying temperature, Hardened asphalt in corrugations can cause the hose to fail.

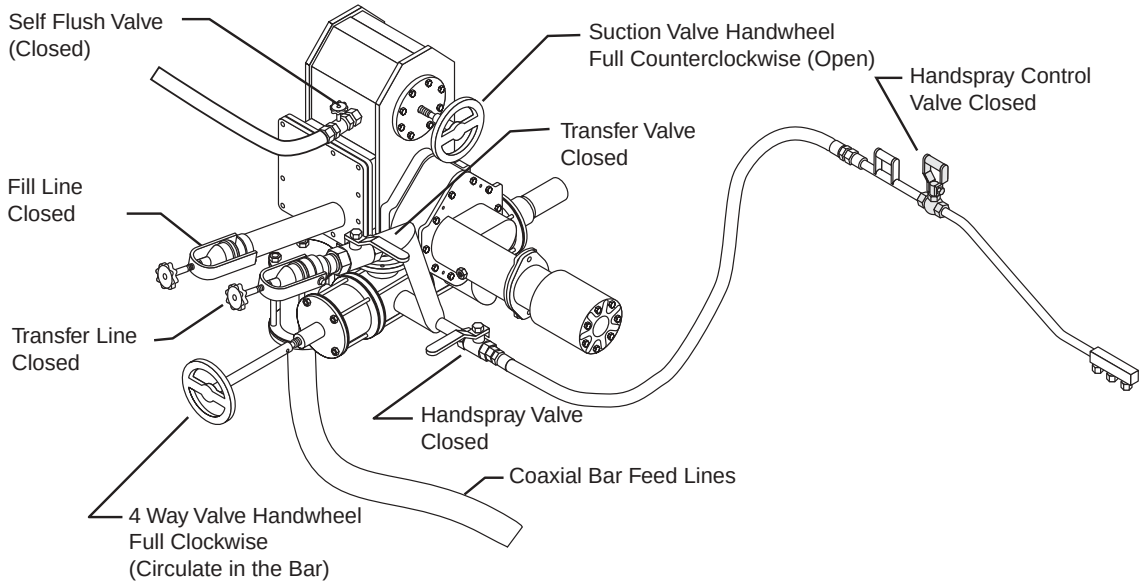

Figure 4. Valve Positions for Circulating in the Bar

Etnyre Spraybar Nozzles

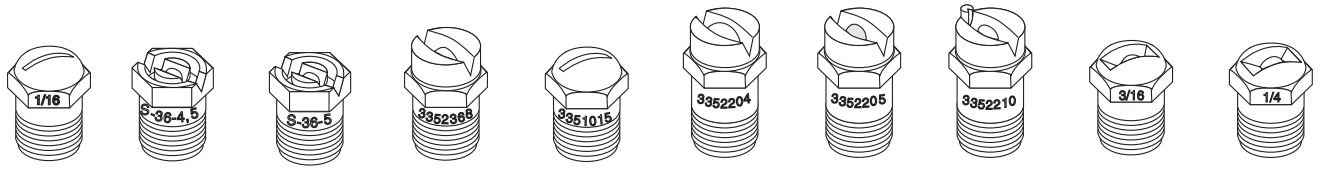

1	2	3	4	5	6	7	8	9	10
3351013	3351008	3351009	3352368	3351015	3352204	3352205	3352210	3351014	3351010

REF	PART NO.	DESCRIPTION	APPLICATION Gal per Sq Yd	APPLICATION Liters per Sq Meter	FLOW GPM/Foot
1	3351013	1/16” Coin Slot	.05 - .20	.23 - 0.90	3 to 4.5
2	3351008	S36-4 V Slot	.10 - .35	.45 - 1.60	4 to 7.5
3	3351009	S36-5 V Slot	.18 - .45	.82 - 2.00	7 to 10
4	3352368	Multi-Material V Slot	.15 - .40	.68 - 1.80	6 to 9
5	3351015	3/32” Cion Slot	.15 - .40	.68 - 1.80	6 to 9
6	3352204	Multi-Material V Slot	.36 - .95	1.6 - 4.30	12 to 21
7	3352205	Multi-Material V Slot	.20 - .55	.90 - 2.50	7.5 to 12
8	3352210	End Nozzle (3352205)	.20 - .55	.90 - 2.50	7.5 to 12
9	3351014	3/16” Coin Slot	.35 - .95	1.6 - 4.30	12 to 21
10	3351010	1/4” Coin Slot	.40 - 1.10	1.8 - 5.00	15 to 24

Table 1 Etnyre Spray Bar Nozzles

Spraying Instructions

Spraying Operations

A correct spray pattern cannot be obtained unless the product is heated to its proper spraying temperature. Cold product will not provide sharp spray edges, and will cause streaking. If heating of the product is required, refer to “Heating Product” for instruction on operation of your particular type of burners.

Spray bar nozzles have a limited flow range at which optimal performance will be achieved. Flow rates greater than this optimal range will cause excessive fogging. Rates that are too low will cause the fan to sag and cause heavy edges. Refer to the nozzle selection chart to select the nozzles appropriate for your conditions (see Table 1).

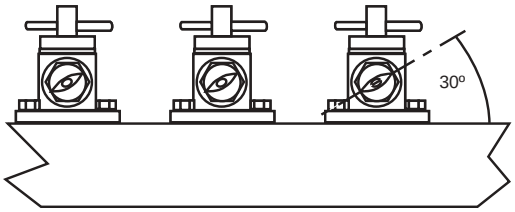

Figure 5. Spraybar Nozzle Angle Adjustment

Adjusting the Spray Bar Nozzle Angle

Adjust the nozzles to obtain an angle of approximately 30º with the spray bar centerline (see figure 5). Every nozzle should be at the same angle.

WARNING

To prevent possible burns, always wear insulated gloves when handling spray bar sections or hoses.

Adjusting the Spray Bar Height

Lower the spray bar so that the nozzles are approximately 12” above the road when the tank is empty. At this height, the spray fans from the nozzles will overlap to provide triple lap coverage of material on the ground. This is the normal spraying height.

Note: under heavy wind conditions, it may be necessary to lower the spraying height.

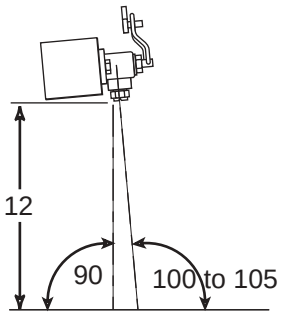

Figure 6. Spray bar Height Adjustment

Spraying Through the Spray Bar

WARNING

To prevent an explosion or fire hazard: Eliminate sparks from engine exhaust.

WARNING

To prevent possible burns to operators or bystanders, or possible equipment damage, do not start any operation if any control settings are unknown.

WARNING

To prevent an explosion or fire hazard: Keep area free all sources of combustion when spraying.

WARNING

To prevent an explosion or fire hazard: Ensure that burners are extinguished before removing any material from tank in any manner. Liquid petroleum (LP.) burners can support a flame for several minutes after the fuel supply is turned off.

WARNING

To prevent possible burns, always wear insulated gloves when handling spray bar sections or hoses.

CAUTION

Do not run pump above rated capacity, damage to equipment may result.

WARNING

To prevent an explosion or fire hazard: Keep burning cigarettes or other sources of combustion away from manholes and overflow vents.

WARNING

To prevent possible burns from hot asphalt spray, do not stand, or allow anyone to stand, where accidental opening of a valve may cause contact with hot asphalt.

1. Unlatch the bar carrying mechanism.

2. Perform the procedure for circulating in the bar, and continue circulating.

3. Select the spray bar feet to spray by connecting the flip levers for the bar sections to be used.

4. Select the desired application rate and adjust the circulation rate accordingly.

5. Set the desired application rate by adjusting the engine speed. Refer to “Establishing Flow Rate/Ground Speed Ratio”.

Place the vehicle rear axle in the proper position for the shot. If equipped, place the *Auto/Count* switch in the *Auto* position. This will accumulate the distance traveled while spraying. Start the vehicle moving, and at the start of the shot, move the *Spray Bar* switch to the *On* position. While spraying, the speed must remain constant to accurately maintain the application rate. When the end of the shot is reached, turn the *Spray Bar* switch *Off*.

During the periods between shots, material should be circulated in the spray bar to keep the bar warm and prevent material set up in the bar. When finished spraying suck back the spray bar.

Suckback for the Spray Bar

1. Set all of the valve positions. (see Figure 7)

2. Set the *Pump Directional Valve* to *Reversed/ Suckback*.

3. Raise the spray bar and fold the wings up.

4. Set the Circulation Rate to 200 GPM.

5. Open the end valves on the spray bar momentarily to let air into the system, if desired. After approximately 2 minutes, place the *4 way valve* in the *Circ in Tank* position.

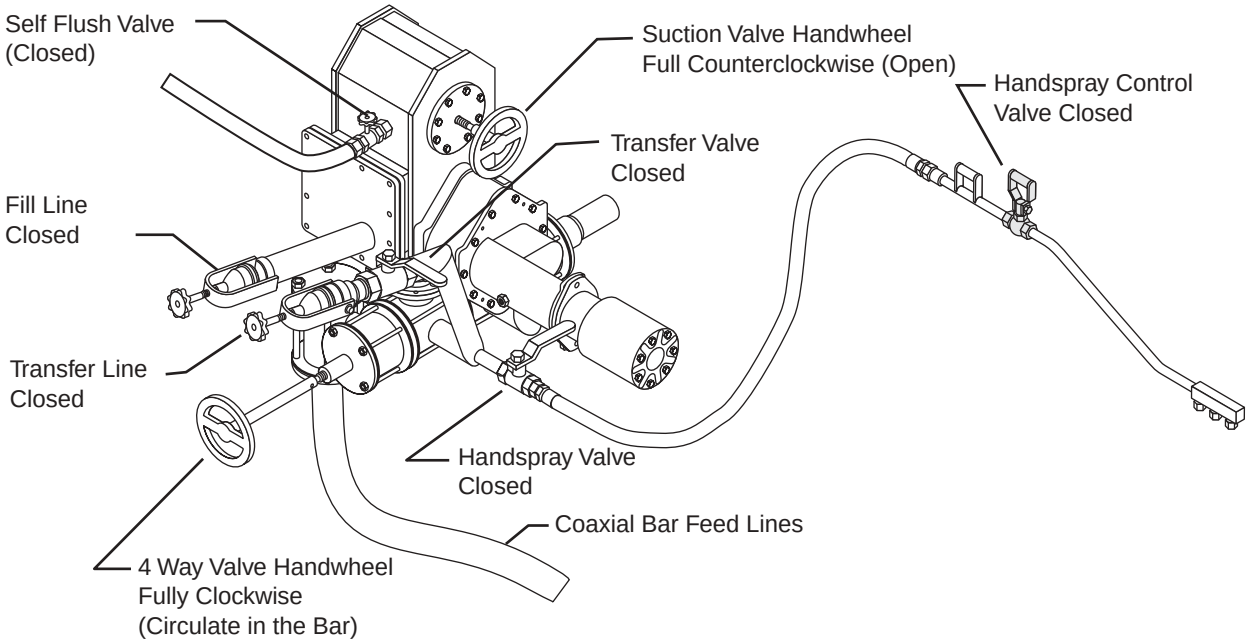

Figure 7. Valve Positions for Suckback

Handspraying

WARNING

To prevent an explosion or fire hazard: Keep area free of all sources of combustion when spraying.

WARNING

To prevent an explosion or fire hazard: Ensure that burners are extinguished before removing any material from tank in any manner. Liquid petroleum (LP.) burners can support a flame for several minutes after the fuel supply is turned off.

WARNING

To prevent an explosion or fire hazard: Eliminate sparks from the engine exhaust

WARNING

To prevent possible burns to operators or bystanders, or possible equipment damage, do not start any operation if any control settings are not known.

WARNING

To prevent possible burns, always wear insulated gloves when handling spray bar sections or hoses.

WARNING

To prevent possible burns from leaking material, be sure all pipe, cap, and hose connections are secure before opening valves.

WARNING

To prevent possible burns from hot asphalt spray, do not stand, or allow anyone to stand, where accidental opening of a valve may cause contact with hot asphalt.

WARNING

To prevent possible burns from hot asphalt when handspraying: Hold the handspray wand in proper position and watch for people.

WARNING

To prevent an explosion or fire hazard: Keep burning cigarettes or other sources of combustion away from manholes and overflow vents.

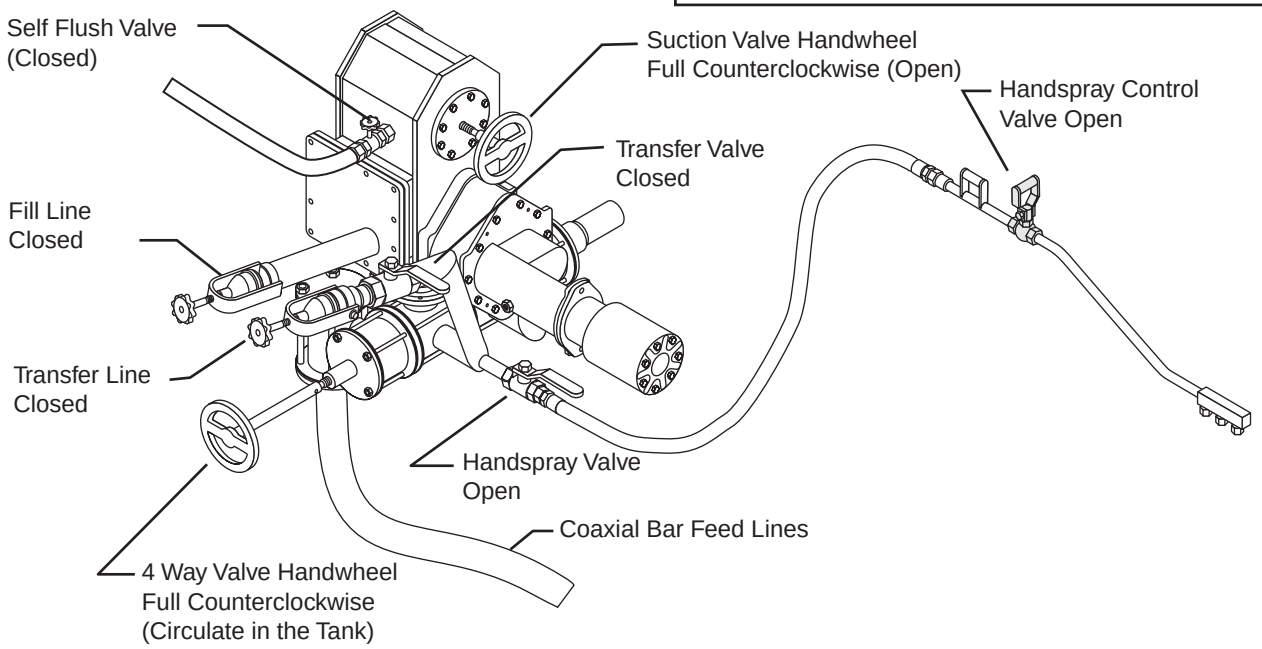

Figure 8. Valve Positions for Handspray

1. Perform the procedure for circulating in the tank and continue circulating. (see Figure 3)

2. With the engine at full throttle, adjust the asphalt pump rate to 150 GPM using the hydraulic flow control valve. (approximately setting 2 1/2)

3. Open the hand spray valve. (See Figure 8)

4. Place the *4-way Valve* in the *Handspray* position (short slot) and turn the handle approximately 2 turns.

5. Turn the hand spray wand valve 90 degrees to spray. Adjust the spray by slowly turning the 4-way valve handle clockwise while engaged in the short slot.

WARNING

Do not use the full travel of the short slot as this can allow the asphalt flow to dead head in the wand when the handspray wand valve is closed and can damage the handspray hose

Adjust the 4-way valve to obtain a normal fan from the nozzles.

When finished hand spraying suck back the hand spray system.

Suckback for Hand Spray System

1. Set all of the valve positions. (see Figure 9)

2. Set the *Pump Directional* valve to *Reversed/Suckback.*

3. Set the Circulation rate to 200 GPM.

4. Place the *4-Way Valve* in the *Transfer* position.

5. Open the hand spray wand valve. Suck the hand spray wand back for about 2 minutes. Close both the hand spray wand and hand spray valves.

6. Place the *4-way Valve* in the *Circ in Tank* position.

If you intend to shut down, refer to “Suckback for shut down”.

Suckback for Shut Down

WARNING

To prevent possible burns to operators or bystanders, or possible equipment damage, do not start any operation if any control settings are not known.

1. Finish suckback for spray bar or handspray.

2. Set the Circulation rate to 200 GPM.

3. After sucking back for approximately 2 minutes, move the *Suction* valve to the *Cleanout* position for an additional 2 minutes and then close the suction valve.

4. Set the *Pump Directional* valve to *Neutral.*

When finished sucking back, refer to “Flushing operations” for instruction.

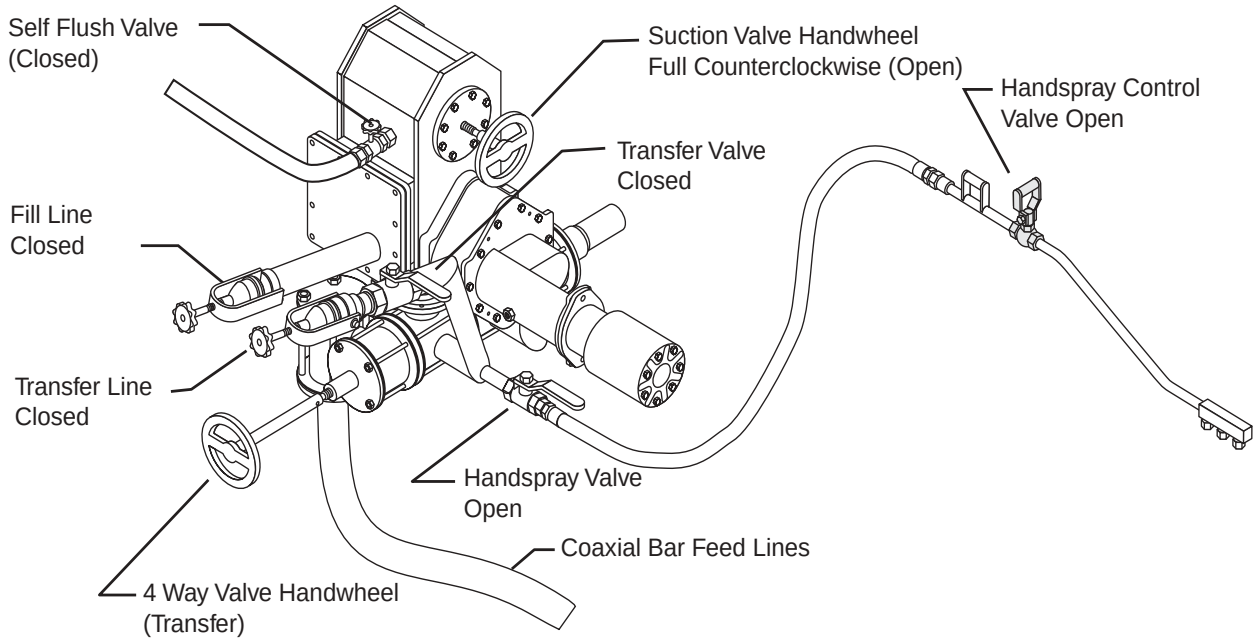

Figure 9. Valve Positions for Handspray Suckback

Pumpoff Instructions

Pump Off Operations

WARNING

To prevent possible burns to operators or bystanders, or possible equipment damage, do not start any operation if any control settings are not known.

WARNING

To prevent possible burns, always wear insulated gloves when handling spray bar sections or hoses.

WARNING

To prevent possible burns from leaking material, be sure all pipe, cap, and hose connections are secure before opening valves.

WARNING

To prevent possible burns from hot asphalt spray, do not stand, or allow anyone to stand, where accidental opening of a valve may cause contact with hot asphalt.

WARNING

To prevent explosion or fire hazard: Ensure that the burners are extinguished before removing any material from the tank in any manner. Liquid petroleum (LP) burners can support a flame for several minutes after the fuel supply is turned off.

1. Finish suckback for spray bar or handspray.
2. Set the Circulation rate to 200 GPM.
3. After sucking back for approximately 2 minutes, move the *Suction* valve to the *Cleanout* position for an additional 2 minutes and then close the suction valve.
4. Connect the pump off hose from the storage tank to the transfer line on the Etnyre Shooter.
5. Ensure that all valves in the pump off line between the distributor and the storage tank are open before opening the suction valve on the distributor.
6. Set all of the valve positions (see Figure 10).
7. Place the *Pump Directional Valve* in the *Pump Normal* position. Then increase the circulation rate to approximately 150 GPM. When pump off is complete, decrease the circulation rate to approximately 50 GPM.
8. Close the valve at the storage tank.
9. Place the *Pump Directional* valve in the *Reversed/ Suckback* position.
10. Carefully break the hose connection at the storage tank to allow air into the hose.
11. Increase the circulation rate to approximately 200 GPM.
12. Carefully and slowly disconnect the hose at the storage tank and elevate the hose to allow the maximum drainage of asphalt to the transfer line. Allow the pump to continue turning while the hose is carefully disconnected from the transfer line and the transfer line cap is replaced and secured.
13. Place the *4-way Valve* in the *Circ in Tank* position.
14. After sucking back for approximately 2 minutes, move the *Suction Valve* to the *Cleanout* position for an additional 2 minutes, and then, close the *Suction Valve*.
15. Place the *Pump Direction* switch in the *Pump Normal* position.

Before shut down refer to “Flushing operations”.

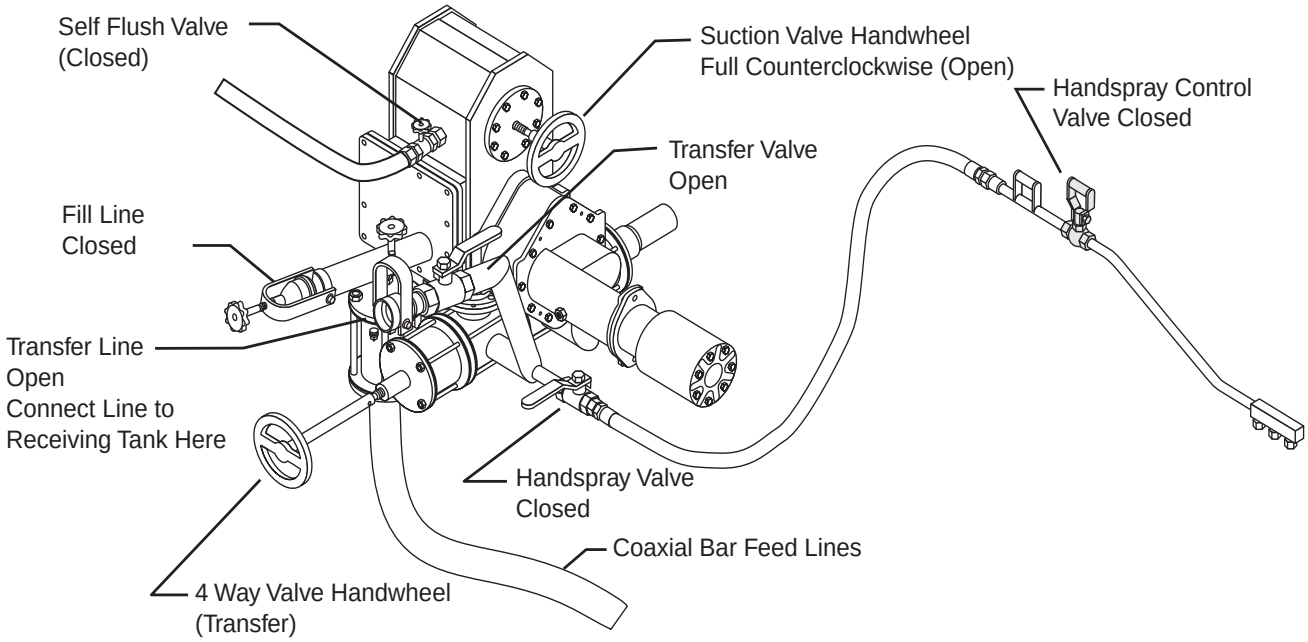

Figure 10. Valve Positions for Pumpoff

Transfer Instructions

Transfer Operations

WARNING

To prevent possible burns to operators or bystanders, or possible equipment damage, do not start any operation if any control settings are not known.

WARNING

To prevent possible burns, always wear insulated gloves when handling spray bar sections or hoses.

WARNING

To prevent possible burns from hot asphalt spray, do not stand, or allow anyone to stand, where accidental opening of a valve may cause contact with hot asphalt.

WARNING

To prevent possible burns from leaking material, be sure all pipe, cap, and hose connections are secure before opening valves.

1. Clean suction strainer after suckback and flushing operations have been completed.
2. Turn the *Burner Control* switches and the *Washdown/Flushing* switch *Off*.
3. Turn the *Power* switch *On*.
4. Place the *Suction Valve* in the *Closed* position.
5. Place the *Pump Directional* Valve in the *Pump Normal* position.
6. Place the *4 way valve* in the *Transfer* position.
7. Set all of the valve positions (see Figure 11).
8. Connect the loading hose from the supply source to the fill connection. Be sure that the connections are tight.
9. Connect the transfer hose from the transfer connection to the storage tank. Be sure that the connections are tight.

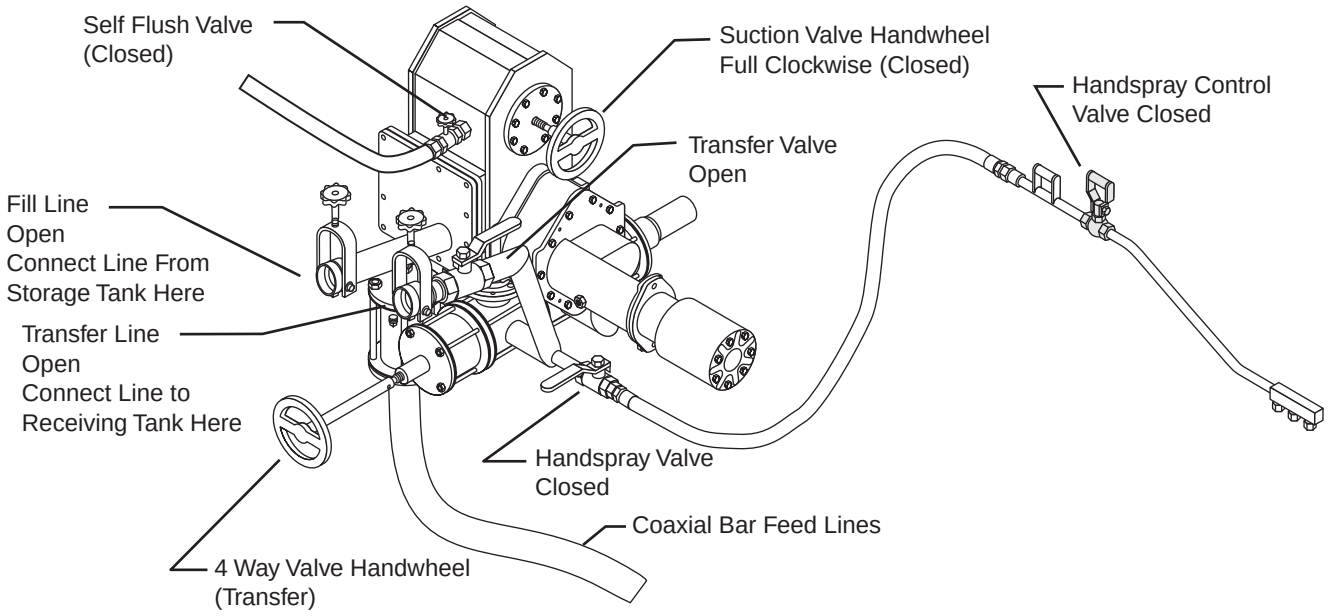

Figure 11 Valve Positions for Transfer Operation

10. Ensure that all valves in the transfer line between the shooter and the storage tank are open before opening the valve on the storage tank containing liquid.

11. Place the *Pump Directional Valve* on the *Pump Normal* position.

12. Increase the *Circulation Rate* increasing the engine speed to obtain the desired rate. 150 gpm is the recommended rate.

13. Slowly and carefully open the valve at the supply source.

14. After the material is transferred, close the valve at the supply source.

15. After 2 minutes, slowly disconnect the hose at the supply source and elevate the hose to drain as much material as possible into the fill line.

16. Disconnect the supply line and replace and secure the cap on the fill line.

17. Close the valve at the storage tank.

18. Place the *Pump Directional Valve* in the *Reversed/Suckback* position.

19. Open the suction valve.

20. Carefully break the hose connection at the storage tank to allow air into the hose.

21. Increase the pump speed to 200 GPM for about 2 minutes. Disconnect the hose at the storage tank and elevate it to allow maximum drainage of asphalt into the transfer line. Allow the pump to continue to turn while disconnecting the hose from the transfer line and while the transfer line cap is replaced and secured.

22. Close the transfer valve.

23. Place the *4-way valve* in the *Circ in tank* position.

24. Set the Circulation rate to 200 GPM.

25. After sucking back for approximately 2 minutes, move the *Suction* valve to the *Cleanout* position for an additional 2 minutes and then close the suction valve.

26. Set the *Pump Directional Valve* to the *Pump Normal* position.

When finished sucking back, refer to “Flushing operations” for instruction.

Flushing Instructions

Flushing Operations

⚠ WARNING

To prevent possible burns to operators or bystanders, or possible equipment damage, do not start any operation if any control settings are not known.

⚠ WARNING

Before removing the fill line cap, make certain that the asphalt pump is turning and the suction valve is closed.

1. After all operations are finished for the day, complete "suck back for shut down"
2. Set all of the valve positions (see Figure 12).
3. Open the *self-flushing valve* and run the pump at approximately 100 GPM. After 2 minutes, close the self flush valve, and stop the pump.
4. Place the *4-way Valve* in the *Transfer* position.

Normally the suckback procedure will remove sufficient material from the circulating system to negate the need for draining the circulating system and spray bar before proceeding with the wash out operation. The flushing operation requires only 3 quarts of flushing solvent. This small amount is not sufficient to fill the lines to the tank, thus preventing solvent from being forced into the tank.

A common practice following completion of the flushing procedure and subsequent shut down is to pour 1 to 2 quarts of solvent into the fill line. This softens or dissolves the residual asphalt in the pump. Allow these solvents to remain in the system until the next use.

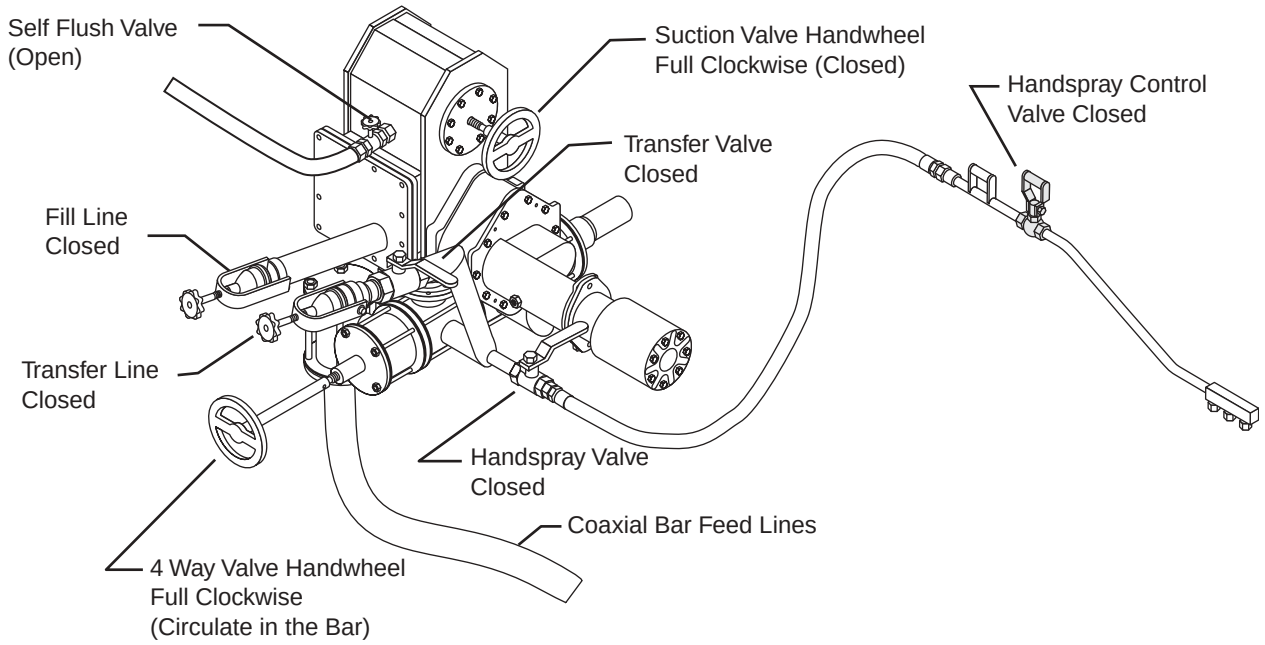

Figure 12. Valve Positions for Flushing Operations

Heating Product

Heating Asphalt with Liquid Propane Gas (LPG) Burners

LPG Supply Tank Requirements

Use only liquid withdrawal type supply tanks for your LPG burners.

Two types of LPG supply tanks are available: tanks for liquid type burners and tanks for vapor type burners. The LPG burners on your Etnyre distributor require a supply tank for liquid type burners. Liquid type burners will operate from a vapor withdrawal tank, however the amount of heat delivered will be dramatically reduced, and the life of the burner will be shortened.

There are three different types of LPG burners: manual control burners, burners with outfire control, and burners with automatic ignition and temperature limiting control.

Manual Control Burners

There are four valves associated with operation of the manual control burners: one at the supply tank, and three in the burner piping (see Figure 13).

The two smaller valves (one at each burner) are bleeder type valves with a small hole drilled through the valve case. Propane liquid is supplied to the lower burner bleeder valve directly from the main shutoff valve. Because of the bleeder hole in this valve, it is NOT possible to shut off all of the fuel to the lower burner by shutting the upper burner shutoff valve. The upper burner shutoff valve will only shut off the upper burner. The lower burner must be shut off using the main shutoff valve.

The upper burner shutoff valve is a positive cut off valve that allows all fuel to be cut off to the upper burner.

WARNING

A fully charged dry chemical type fire extinguisher must be within easy reach whenever the burners are operating or there is an open flame near the distributor. Minimum dry chemical capacity of the fire extinguisher should be 10 pounds.

WARNING

To prevent an explosion or fire hazard: Eliminate sparks from engine exhaust.

DANGER

To avoid an extreme fire hazard or explosion: NEVER use gasoline as fuel in low pressure or generating burners.

WARNING

To prevent an explosion or fire hazard: Position the unit broadside to the wind to prevent volatile fumes from drifting toward the burners

WARNING

To prevent an explosion or fire hazard: Do not operate the burners if the tank is damaged or leaking.

WARNING

To prevent an explosion: Do not operate the burners when the vehicle is unattended, when the vehicle is in motion, or with the vehicle in a confined area.

WARNING

To prevent an explosion or fire hazard: When the burners go out, shut off the fuel supply to both burners and allow the fumes to ventilate for at least 3 minutes before re-lighting the burners.

WARNING

To prevent an explosion or fire hazard: Do not heat the material beyond the manufacturer's recommended temperature.

WARNING

To prevent an explosion or fire hazard: Keep burning cigarettes or other sources of combustion away from manholes and overflow vents

Note: It is recommended that two persons be involved in lighting the burners.

Burner Operation

WARNING

To prevent possible burns to operators or bystanders, or possible equipment damage, do not start any operation if any control settings are unknown

WARNING

To prevent an explosion or fire hazard: Check the tank vent to insure that it is free from obstruction before lighting the burners.

WARNING

To prevent possible hand or facial burns: Always light the inside burner first. Do not reach across a lit burner to light or re-light the inside burner. Shut the outside burner off before lighting the inside burner.

WARNING

To prevent an explosion or fire hazard: Do not operate the burners with the manhole open or open the manhole while the burners are in operation.

WARNING

To prevent possible burns: Always use a torch to light the burners. Never attempt to light the burners with a match or a pocket lighter.

IMPORTANT

Circulating the asphalt in the tank while heating is recommended for faster heating and reduced carbon formation on the flues. Only when the asphalt pump is “Frozen” is it acceptable to operate the burners without circulating asphalt in the tank. However, if the asphalt pump is frozen, carefully apply heat to the pump and start circulating the material as soon as possible.

1. Be sure that the main shutoff valve and the upper burner shutoff valve are fully closed and the bleeder valves are turned fully clockwise before starting.

2. Open the dampers in the exhaust stacks.

Circulate the asphalt in the tank before lighting the burners. If the asphalt is too cold to pump, start circulating the material in the tank as soon as possible after lighting the burner.

3. Open the main shutoff valve and light the lower burner. As soon as the burner lights, open the bleeder valve fully. No preheating is necessary.

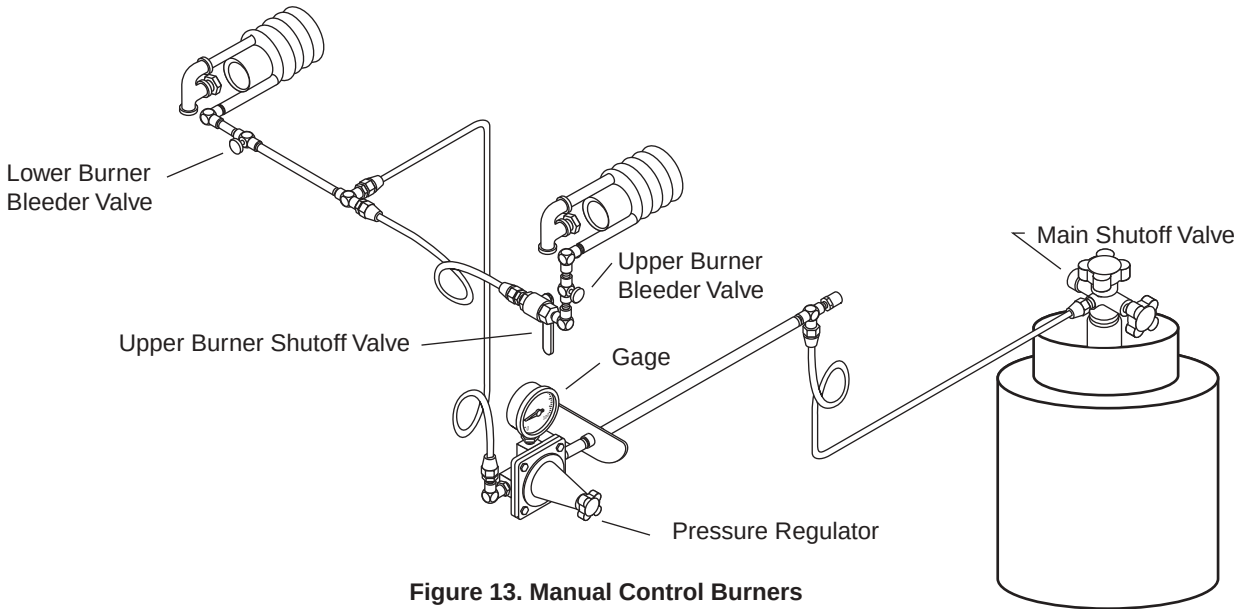

Figure 13. Manual Control Burners

Burners With Outfire Controls

Equipment Design

The burner and the burner control valves are identical to the manual operated burner system. However, burners with outfire controls are equipped with an outfire control box. The outfire controls consist of two thermocouples, a push button start switch, an electric fuel solenoid valve, a pressure regulator and a pressure gage. (See Figure 14.)

The heat sensing thermocouples are positioned in each burner. If either burner loses its flame, the thermocouple senses the drop in temperature, and deactivates the fuel solenoid, and the fuel to both burners is shut off.

The only operational differences between the manual burners and burners with the optional outfire controls is the start up and shut down procedures. Unlike the manual burners, when the burners are equipped with outfire controls, no fuel flows to the burners when the solenoid valve is closed.

⚠ WARNING

A fully charged dry chemical type fire extinguisher must be within easy reach whenever the burners are operating or there is an open flame near the distributor. Minimum dry chemical capacity of the fire extinguisher should be 10 pounds.

⚠ DANGER

To avoid an extreme fire hazard or explosion: NEVER use gasoline as fuel in low pressure or generating burners.

⚠ WARNING

To prevent an explosion or fire hazard: Position the unit broadside to the wind to prevent volatile fumes from drifting toward the burners

⚠ WARNING

To prevent an explosion or fire hazard: Do not operate the burners if the tank is damaged or leaking.

⚠ WARNING

To prevent an explosion: Do not operate the burners when the vehicle is unattended, when the vehicle is in motion, or with the vehicle in a confined area.

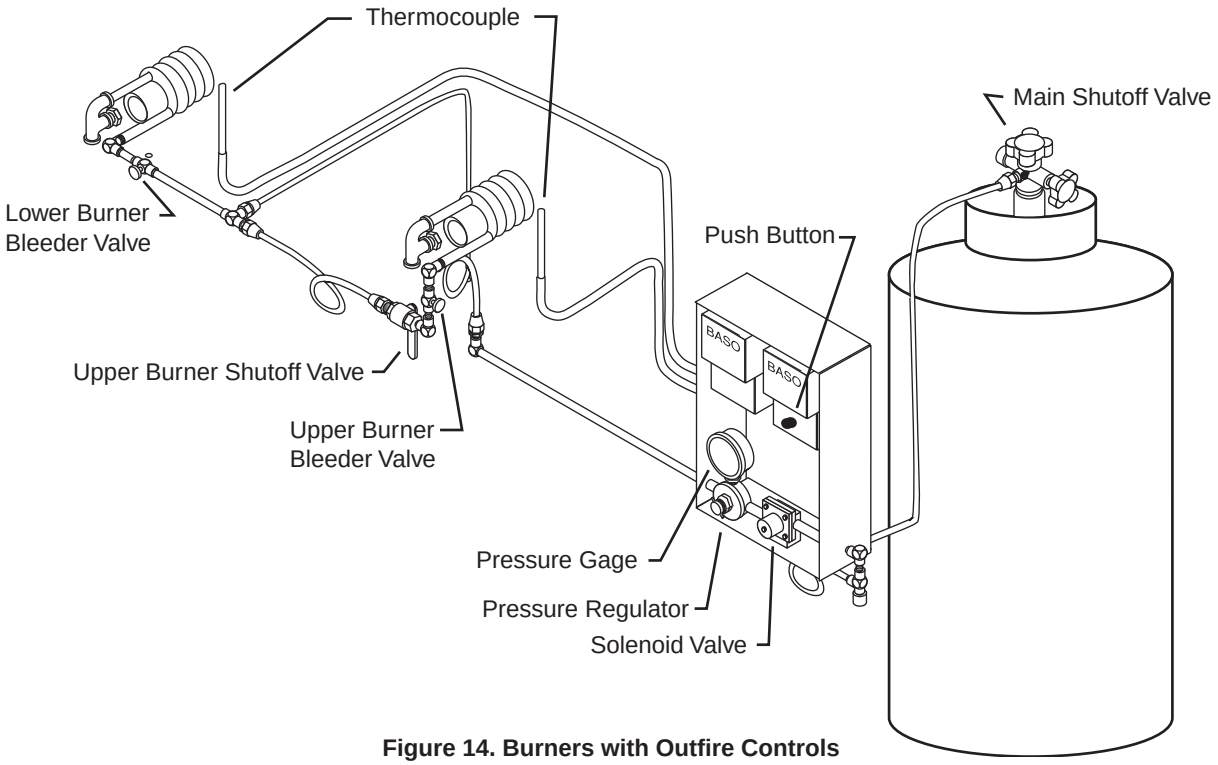

Figure 14. Burners with Outfire Controls

WARNING

To prevent an explosion or fire hazard: When the burners go out, shut off the fuel supply to both burners and allow the fumes to ventilate for at least 3 minutes before re-lighting the burners.

WARNING

To prevent an explosion or fire hazard: Do not heat the material beyond the manufacturer's recommended temperature.

WARNING

To prevent an explosion or fire hazard: Keep burning cigarettes or other sources of combustion away from manholes and overflow vents.

Burner Operation with Outfire Controls

1. Open the dampers in the exhaust stacks.

Circulate the asphalt in the tank before lighting the burners. If the asphalt is too cold to pump, start circulating the material in the tank as soon as possible after lighting the burner.

2. Ensure that the upper burner shutoff valve is closed and that the bleeder valves for both burners are turned fully clockwise.

WARNING

To prevent an explosion or fire hazard: Eliminate sparks from engine exhaust.

WARNING

To prevent possible burns to operators or bystanders, or possible equipment damage, do not start any operation if any control settings are unknown.

WARNING

To prevent an explosion or fire hazard: Check the tank vent to insure that it is free from obstruction before lighting the burners.

WARNING

To prevent possible hand or facial burns: Always light the inside burner first. Do not reach across a lit burner to light or re-light the inside burner. Shut the outside burner off before lighting the inside burner.

WARNING

To prevent an explosion or fire hazard: Do not operate the burners with the manhole open or open the manhole while the burners are in operation.

WARNING

To prevent possible burns: Always use a torch to light the burners. Never attempt to light the burners with a match or a pocket lighter.

3. Open the main shutoff valve at the tank. No fuel will be flowing at this point.

IMPORTANT

Both burners must lit on low flame even if only one burner will be used for heating

4. Place the ignition torch at the inside burner nozzle and depress the pushbutton in the outfire control box. Continue to hold the pushbutton in until both burners are lit.

5. As soon as low fire is established at the lower burner, open the upper burner shutoff valve and light the upper burner on low fire.

6. If both burners are to be used for heating, you can now open both bleeder valves fully. If only the lower burner is to be used for heating, open the bleeder valve on the lower burner and allow the upper burner to remain burning on low flame so the thermocouple will be heated. Remember, if either burner flame goes out, the outfire control will shut the solenoid valve cutting the fuel off to both burners.

7. After 30 to 40 seconds, release the pushbutton and observe the pressure gage. If the pressure starts to drop rapidly, depress the pushbutton and hold it in for another 30 seconds. It may require a slight increase in fuel to the upper burner to adequately heat the thermocouple. Once both of the thermocouples are heated the pushbutton can be released.

When the LPG burners are operating, the outside of the fuel line up to the first coil of the burner should frost over. If no frost forms it is an indication that the burners are operating on vapor instead of liquid. This condition must be corrected immediately to prevent damage to the burners.

If after the lines frost over, the flame starts to die down and the frost melts off the fuel line, it is likely that there is moisture in the fuel supply tank. When the moisture passes through the frost covered lines it forms ice crystals that stop the fuel flow. This can be overcome by adding 1 pint of 99.85% pure Genuine Anhydrous Methanol when the fuel tank is full. See your local LPG supplier for details. Keeping the tank valve closed when the tank is empty will keep moisture from entering the tank.

8. When the desired product temperature is reached:

a. Close the main shutoff valve.

b. Depress the pushbutton in the outfire control box and hold it until all the fuel is burned and there is no flame at either burner.

c. Close both bleeder valves and the upper burner shutoff off valve.

d. Close the exhaust stack damper to prevent heat loss.

Burners with Automatic Ignition and Temperature Limiting Control

Equipment Description

The temperature limiting control box contains the temperature limiting control components as well as the automatic ignition circuitry. (See Figure 16)

The automatic ignition circuit consists of two 12V coils, two spark plugs, a pair of thermocouples, (one at each burner), and a momentary pushbutton switch. The 12V coils send high voltage to the spark plugs that causes sparks to arc intermittently at each pilot burner whenever there is fuel pressure in the line from the main supply tank. The thermocouples provide a signal that indicates when there is a flame at the pilot burners. The momentary pushbutton switch on the control box is used to fire the main burners once the pilot burners have ignited and the thermocouples have been heated sufficiently.

The temperature limiting control circuit consists of a temperature probe in the distributor tank that senses the asphalt temperature, a thermostatic switch in the control box and a temperature adjustment dial on the face of the control box. When the temperature of the asphalt in the distributor is heated to the temperature selected with the temperature adjustment dial, the thermostatic switch shuts down the burners.

DANGER

To avoid an extreme fire hazard or explosion: NEVER use gasoline as fuel in low pressure or generating burners.

WARNING

A fully charged dry chemical type fire extinguisher must be within easy reach whenever the burners are operating or there is an open flame near the distributor. Minimum dry chemical capacity of the fire extinguisher should be 10 pounds.

WARNING

To prevent an explosion or fire hazard: Position the unit broadside to the wind to prevent volatile fumes from drifting toward the burners

WARNING

To prevent an explosion or fire hazard: Do not operate the burners if the tank is damaged or leaking.

WARNING

To prevent an explosion: Do not operate the burners when the vehicle is unattended, when the vehicle is in motion, or with the vehicle in a confined area.

WARNING

To prevent an explosion or fire hazard: When the burners go out, shut off the fuel supply to both burners and allow the fumes to ventilate for at least 3 minutes before re-lighting the burners.

WARNING

To prevent an explosion or fire hazard: Do not heat the material beyond the manufacturer's recommended temperature.

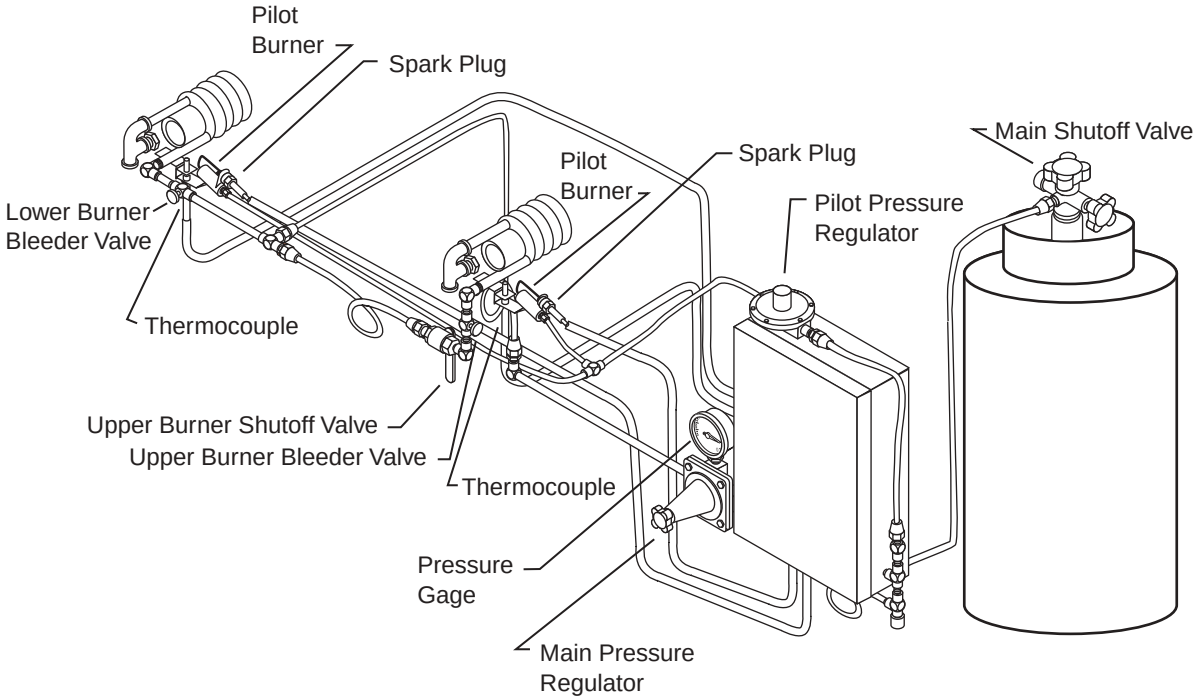

Figure 15. Burners with Automatic Ignition and Temperature Controls

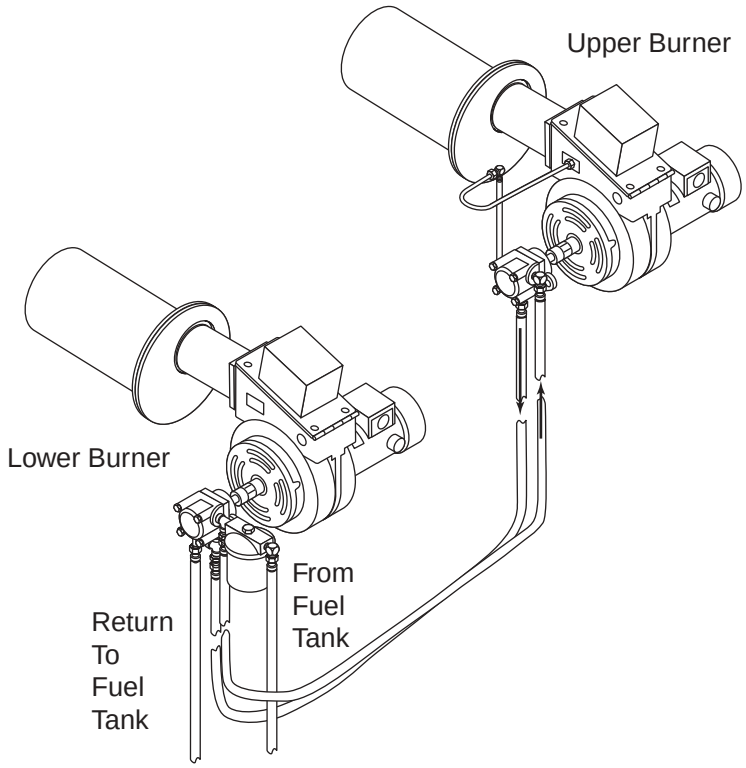

Figure 16. Electric Driven Fuel Oil Burners

WARNING

To prevent an explosion or fire hazard: Keep burning cigarettes or other sources of combustion away from manholes and overflow vents.

Burner Operation with Auto Ignition & Temp Control

WARNING

To prevent an explosion or fire hazard: Eliminate sparks from engine exhaust.

WARNING

To prevent possible burns to operators or bystanders, or possible equipment damage, do not start any operation if any control settings are unknown.

WARNING

To prevent an explosion or fire hazard: Check the tank vent to insure that it is free from obstruction before lighting the burners.

WARNING

To prevent an explosion or fire hazard: Do not operate the burners with the manhole open or open the manhole while the burners are in operation.

1. Open the dampers in the exhaust stacks

Circulate the asphalt in the tank before lighting the burners. If the asphalt is too cold to pump, start circulating the material in the tank as soon as possible after lighting the burner.

2. Open the main shutoff valve. The spark plugs will begin to arc and will ignite the pilot burners. With this type of control, the lower burner may be operated without opening the upper burner shut off valve. If both burners are to be used, the upper burner shutoff valve should be opened.

3. Set the thermostat to the desired temperature.

4. Allow the pilot burners to heat the thermocouple probes for at least 2 minutes. When the pilot burners have heated the thermocouples sufficiently the sparker will stop. Press the momentary pushbutton to fire the main burners. The bleeder valves may then be fully opened.

On new or rebuilt units, monitor the product thermometer to make certain that the burners shut down when the desired temperature is reached. (as set on the temperature adjustment dial). If the burners do not shut down at the correct temperature, refer to “Calibrating the Thermostat”.

To shut the system down:

1. Close the main shutoff valve.

2. Increase the thermostat setting 50 to 75ºF higher and push the start button. This will bring on the main burners and quickly burn off all of the fuel in the line between the tank and the control box. The pilot burners may continue to burn for a short time after the main burners cut off. Do not draw material from the tank as long as there is a flame present.

3. Close the exhaust stack dampers.

Calibrating the Thermostat

If the desired temperature is reached and the burners have not shutdown, remove the thermostat dial. Using a small screwdriver, slowly turn the screw in the center of the thermostat shaft counterclockwise until the main burners shut down.

If the main burners shut down before the desired temperature is reached, remove the dial and rotate the screw clockwise half a turn and push the start button. Monitor the thermometer and make further adjustments if needed to calibrate the thermostat.

Electric Driven Fuel Oil Burner Operation

WARNING

To prevent an explosion or fire hazard: Keep burning cigarettes or other sources of combustion away from manholes and overflow vents.

WARNING

To prevent possible burns to operators or bystanders, or possible equipment damage, do not start any operation if any control settings are unknown.

WARNING

To prevent an explosion or fire hazard: Eliminate sparks from engine exhaust.

DANGER

To avoid an extreme fire hazard or explosion: NEVER use gasoline as fuel in low pressure or generating burners.

WARNING

A fully charged dry chemical type fire extinguisher must be within easy reach whenever the burners are operating or there is an open flame near the distributor. Minimum dry chemical capacity of the fire extinguisher should be 10 pounds.

WARNING

To prevent an explosion or fire hazard: Position the unit broadside to the wind to prevent volatile fumes from drifting toward the burners.

WARNING

To prevent an explosion or fire hazard: Do not operate the burners if the tank is damaged or leaking.

WARNING

To prevent an explosion: Do not operate the burners when the vehicle is unattended, when the vehicle is in motion, or with the vehicle in a confined area.

WARNING

To prevent an explosion or fire hazard: When the burners go out, shut off the fuel supply to both burners and allow the fumes to ventilate for at least 3 minutes before re-lighting the burners.

WARNING

To prevent an explosion or fire hazard: Do not heat the material beyond the manufacturer's recommended temperature.

WARNING

To prevent an explosion or fire hazard: Check the tank vent to insure that it is free from obstruction before lighting the burners.

WARNING

To prevent an explosion or fire hazard: Do not operate the burners with the manhole open or open the manhole while the burners are in operation.

1. Open the dampers in the exhaust stacks.

Circulate the asphalt in the tank before lighting the burners. If the asphalt is too cold to pump, start circulating the material in the tank as soon as possible after lighting the burner.

2. To light the lower burner, turn on the *Lower Burner Power* switch.

3. If upper burner operation is desired, turn on the *Upper Burner Power* switch.

Do not heat the material higher than the spraying temperature recommended by the asphalt supplier.

To shut down the burners, turn off the burner power switches and shut the exhaust dampers.

Kerosene Burners

DANGER

To avoid an extreme fire hazard or explosion: NEVER use gasoline as fuel in low pressure or generating burners.

WARNING

To prevent an explosion or fire hazard: Eliminate sparks from engine exhaust

WARNING

To prevent possible burns to operators or bystanders, or possible equipment damage, do not start any operation if any control settings are unknown.

WARNING

To prevent an explosion or fire hazard: Do not operate the burners if the tank is damaged or leaking.

WARNING

A fully charged dry chemical type fire extinguisher must be within easy reach whenever the burners are operating or there is an open flame near the distributor. Minimum dry chemical capacity of the fire extinguisher should be 10 pounds.

WARNING

To prevent an explosion or fire hazard: Position the unit broadside to the wind to prevent volatile fumes from drifting toward the burners.

WARNING

To prevent an explosion: Do not operate the burners when the vehicle is unattended, when the vehicle is in motion, or with the vehicle in a confined area.

WARNING

To prevent an explosion or fire hazard: When the burners go out, shut off the fuel supply to both burners and allow the fumes to ventilate for at least 3 minutes before re-lighting the burners.

WARNING

To prevent an explosion or fire hazard: Do not heat the material beyond the manufacturer's recommended temperature.

Use clean, moisture free kerosene. The fuel pressure should be set to 45-50 PSI, when circulating at 75 GPM.

WARNING

To prevent an explosion or fire hazard: Check the tank vent to insure that it is free from obstruction before lighting the burners.

WARNING

To prevent an explosion or fire hazard: Do not operate the burners with the manhole open or open the manhole while the burners are in operation.

WARNING

To prevent possible hand or facial burns: Always light the inside burner first. Do not reach across a lit burner to light or re-light the inside burner. Shut off the outside burner before lighting the inside burner.

WARNING

To prevent possible burns: Always use a torch to light the burners. Never attempt to light the burners using a match or pocket lighter.

To light burners.

1. Open the exhaust stack dampers.

Circulate the asphalt in the tank before lighting the burners. If the asphalt is too cold to pump, start circulating the material in the tank as soon as possible after lighting the burner.

2. Spread the wick in the flame pan.

3. Carefully open the needle valves without spraying fuel into the flues, close the valves when the flame pan is 1/4 full.

4. Ignite the wick and wait until gas issues from the vaporizing plug, then open the needle valve slightly.

5. If the coil is generating properly, an almost colorless gas will issue from the vaporizing plug.

6. Open the valve as necessary to obtain a bright orange flame.

7. A short blue flame that is easily extinguished indicates over generation in the coils, caused by a vaporizing plug opening that is too small or carbon formation in the coil.

8. A yellow smoky flame indicates that needle valve is open too far, causing under generation. It can also be the result of too large a hole in the vaporizing plug.

9. Shut the valves

10. Close the exhaust stack dampers.

Lubrication Chart

INTERVAL	POINT	IDENTIFICATION	LUBRICANT	QUANTITY
DAILY	1	Pump Suction Strainer	Clean	
	2	Hydraulic Reservoir	HO	Fill to gage
WEEKLY	3	Manhole Cover	EO	Sparingly
	4	Spraybar Controls	EO	Sparingly
	5	Bar Swivels	MPG	Sparingly
MONTHLY	6	Bar Carry Mechanism	MPG	Sparingly
WHEN SERVICED	7	Pump Shaft	AS	Sparingly

HO: Hydraulic oil with nominal ASTM viscosity Grade 46 (such as Rando Oil HD 46)

EO: Engine oil 10W MIL-L-2104-F

AS: Anti-Seize MIL-T-5544

MPG: Multi Purpose Grease MIL-G-18458B-SH

NOTE: Daily wipe cylinder rods clean and lightly oil. Check hydraulic filter and replace if vacuum gage is in the red arc.

NOTE: If the Hydraulic oil filter gage is in the red area, replace the filter canister.

Troubleshooting

Trouble	Cause	Remedy
Spray Fogs	Pump speed too fast for size of nozzle	Lower pump speed or change nozzles. See “Establishing Flow Rate/Ground Speed Ratio.”
Spray Streaks Flow	Pump speed too slow.	Increase pump speed. See “Establishing Rate/Ground Speed Ratio.”
	Nozzles not at proper angle.	Adjust angle of nozzles.
	Spray bar at improper height above ground.	Adjust spray bar height.
	Material temperature too low.	Heat material to correct temperature.
Spray Lacks Pressure	Pump speed too slow.	Adjust pump speed.
	One or more control valves in incorrect position, not fully opened or closed, or leaking.	Check position of all control valves. Be sure all valves are fully opened or closed. Repair leaking valves as necessary.
	Suction strainer plugged.	Clean suction strainer.
All Nozzles Do Not Cut Off Spray	Spray bar linkages not adjusted correctly.	Adjust linkage.
Pump Will Not Turn, Or Turns Slowly.	Material in tank or pump below pumping temperature.	Heat material to proper pump temperature.
	Air leak in suction line from reservoir to filter to inlet of charge pump.	Locate and repair leak.
	Hydraulic system pressure low.	Raise pressure.
	Low oil in hydraulic reservoir.	Add hydraulic oil to correct level.
	Spray bar valves set improperly.	Correct spray bar valve settings.
	Defective Hyd. motor.	Check for excessive case drain in motor. Repair or replace defective components.
Hydraulic Oil Overheats.	Material in tank or pump below pumping temperature.	Heat material to proper pump temperature.
	Air leak in suction line from reservoir to filter to inlet of charge pump.	Locate and repair leak.
	Low oil in hydraulic reservoir.	Add hydraulic oil to correct level.
	Spray bar valves set improperly.	Correct spray bar valve settings.

Trouble	Cause	Remedy
Application Rate Varies	Quantity of material in tank not being measured accurately.	Use Etnyre measuring stick for accurate readings. Be sure tank is level when measuring.
	Suction strainer plugged.	Clean suction strainer regularly.
	Hydrostatic controls not firmly positioned.	Ensure that all controls are firmly locked in place.
	Suck back valves not fully closed.	

Maintenance

Electrode Assembly Adjustments

1. Adjust electrode assembly per Figure 17.

NOTE: *Before installing electrode assembly, check that blower wheel turns freely and that all set screws are tightened securely.*

2. Install electrode assembly into air tube unit. Use escutcheon plate for mounting (see Figure 18).

WARNING

To prevent an explosion or fire hazard: Keep area free of sparks or open flames when testing burners.

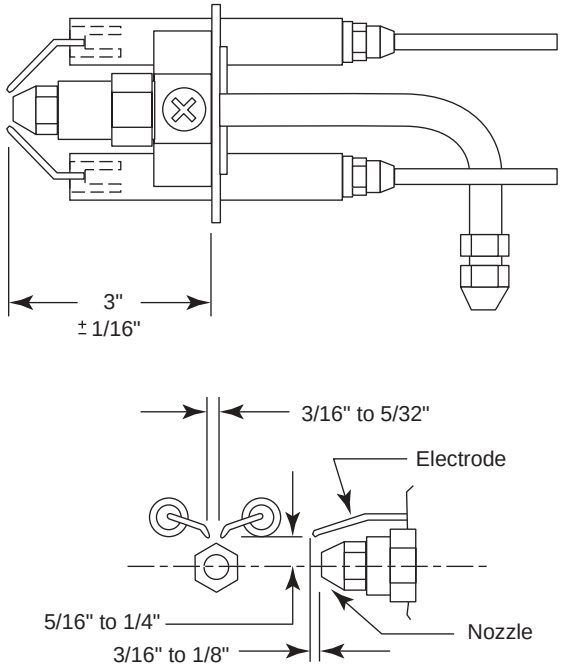

Figure 17. Burner Electrode Adjustments

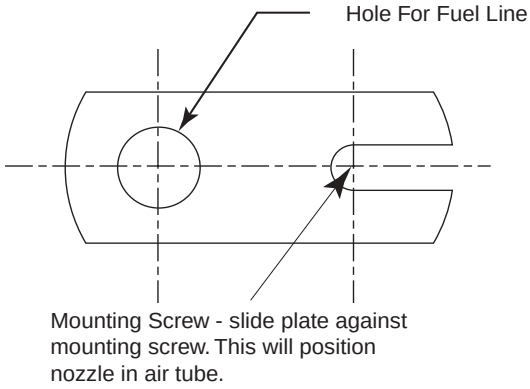

Figure 18. Electrode Assembly Installation

Check Ignition Transformer Spark

1. Turn on master power switch in rear control box.

2. Turn on Burner Power switch.

3. Hold an insulated screwdriver approximately 1 to 1-1/2 inches above the two wire springs on the transformer and hold the ignition switch down. It should be possible to jump a spark across the 1 to 1-1/2 inch gap between the springs and the screwdriver. If unable to generate a spark, check the voltage at terminal spades of the 12 volt ignition control box. Voltage must be 110 volts AC minimum. If voltage is incorrect or not present, check ground wiring.

4. Reposition ignition transformer and secure to burner housing.

Fire Burners

1. Ensure that fuel oil pressure is 100 PSIG.

⚠ WARNING

To prevent an explosion or fire hazard: Flues must be covered by minimum 6 inches of material when burners are in operation. When testing burners, do not run burners for more than 15 seconds if tank is empty.

2. Hold ignition switch down until ignition occurs, and keep switch down for an additional 2 to 4 seconds before releasing.

3. Run burner for 15 seconds maximum, then shut down.

Adjusting Spray Bar Nozzle Angle

Adjust nozzles to obtain an angle of approximately 30° with bar centerline (see Figure 19). Every nozzle should be at the same angle.

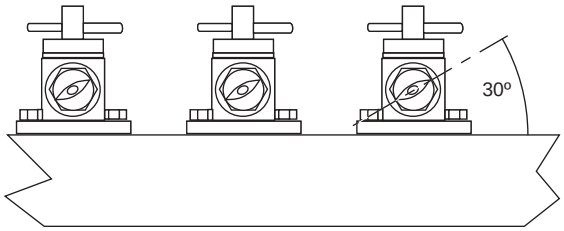

Figure 19. Nozzle Angle Adjustment

NOTE: *A nozzle adjustment wrench is supplied in the tool box of each new unit.*

Adjusting Spray Bar Height

Lower spray bar and adjust so that nozzles are approximately 12 inches above road when tank is empty. At this height spray fans will overlap to provide triple lap coverage. See Figure 20

NOTE: *Under heavy wind conditions it may be necessary to lower spray bar further.*

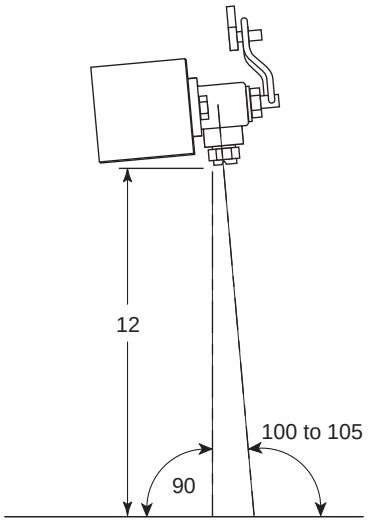

Figure 20. Nozzle Height Adjustment

General Fuel Data And Heating Terminology

Fuel Data

Fuel	Weight Per Gallon	BTU Content
#2 Fuel Oil	7.49 lbs	144,300 per gallon
Kerosene	6.97 lbs.	134,500 per gallon
Propane	4.20 lbs.	91,500 per gallon

Approximate Burner Fuel Consumption

Low Pressure Fuel Oil

935,000 BTU @ PSI
6.5 GPH per burner
(144,000 BTU per gallon)

Kerosene Generating

575,000 BTU @ 40 PSI
4.25 GPH per burner
(135,000 BTU per gallon)

Heating Terminology

Flash Point (Open Cup)

The temperature at which a flammable liquid in an open container emits vapor that will flash when exposed to a direct flame. This temperature is lower than required for the liquid mass to ignite.

Closed Flash Point

The temperature at which a flammable liquid in a closed container emits a vapor that will flash when exposed to a direct flame. This temperature is lower than required for the liquid mass to ignite. The closed flash point is generally 30°(F) lower than the open cup flash point.

Fire Point

The temperature at which a flammable liquid emits a vapor at a rate that will continue to burn after it has flashed.

Ignition Temperature (Kindling Temperature)

The lowest temperature at which a combustible material will continue to burn once ignited.

Convection

Heat transfer by a flow of a liquid or gas over a solid material. Example: Flues in asphalt tank are heated from hot gases passing through them, or, heat transfer coils in tank are heated from steam or hot oil passing through them.

Conduction

Heat transfer through a solid mass by direct molecular contact. Example: Heat applied only to one end of a metal rod will be transferred throughout the entire body by molecular transfer.

Something Wrong with this manual?

If you find inaccurate or confusing information in this manual, or just have a suggestion for improvement, please let us know.

Mail or FAX this form to us at: E. D. ETNYRE & CO. 1333 S. Daysville Rd. Oregon, Illinois 61061 • Fax: 800-521-1107 • www.etnyre.com
Attn: Service Manager

Recommended changes from: _____

Address _____

City, State, Zip _____

Phone _____

Date Sent _____

Manual Number (upper right corner of front cover) _____

Manual Title _____

Explain the problem in the space below.

Page Number	Reference Number	Paragraph Number	Figure Number	Problem (please be specific)