M-208-99

SN/: K5576, K5652 thru K5982

Updated August 23, 2018

CHIPSPREADER
PARTS MANUAL

Hydrostatic Drive - 2WD & 4WD
with Fixed Spread Hopper

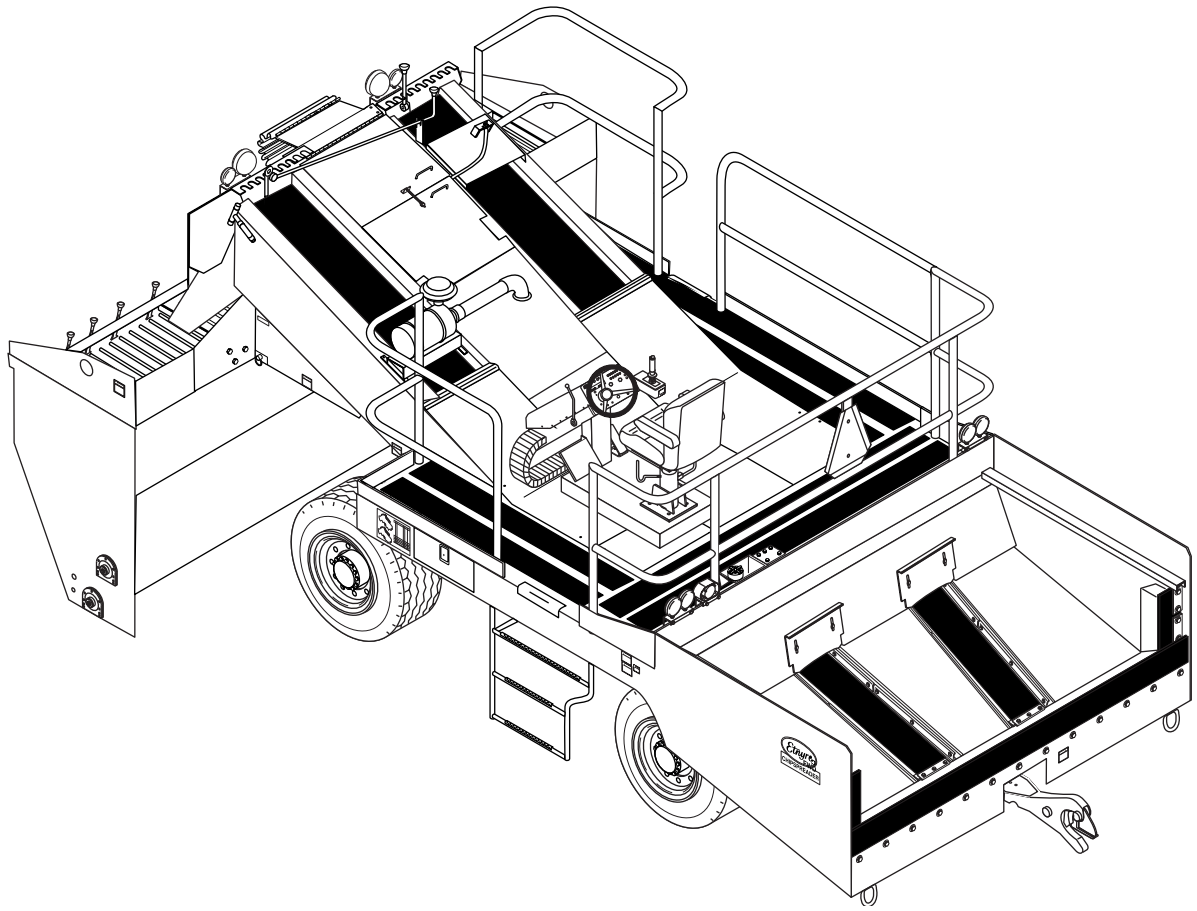

E.D. ETNYRE & CO. 1333 S. Daysville Road, Oregon, Illinois 61061

Phone: 815/732-2116 or 800/995-2116 • Fax: 800-521-1107 • www.etnyre.com

M-208-99

S/N K5576, K5652 thru K5982

Updated March 31, 2015

FIXED SPREAD HOPPER CHIPSPREADER PARTS MANUAL

HOW TO ORDER PARTS

To assure prompt delivery when ordering parts, please furnish the following information: **1)** Complete name and address of consignee. **2)** Method of shipment preferred. **3)** Is shipment to be prepaid or collect? **4)** Serial numbers of units to which parts apply. **5)** Complete part numbers and descriptions. **6)** Any special instructions. Part numbers beginning with 9250000 are category numbers and must include descriptive term to complete the order (such as, length, color, etc.). These items when listed in the parts manual will indicate what information must be included.

SPECIFY UNIT SERIAL NUMBER WHEN ORDERING PARTS!

WARRANTY

E.D. Etnyre & Co. warrants to the original Purchaser, its new product to be free from defects in material and workmanship for a period of twelve (12) months after date of delivery to original Purchaser. The obligation of the Company is limited to repairing or replacing any defective part returned to the Company and will not be responsible for consequential damages or any further loss by reason of such defect.

The company excludes all implied warranties of merchantability and fitness for a particular purpose. There are no warranties, express or implied, which extend beyond the description of the goods contained in this contract.

This warranty does not obligate the Company to bear the cost of machine transportation in connection with the replacement or repair of defective parts, nor does it guarantee repair or replacement of any parts on which unauthorized repairs or alterations have been made or for components not manufactured by the Company except to the extent of the warranty given by the original Manufacturer.

This warranty does not apply to:

(1) Normal start-up services, normal maintenance services or adjustments usually performed by the selling dealer, factory service representative or customer personnel.

(2) Any product manufactured by E.D. Etnyre & Co. purchased or subjected to rental use.

(3) Any product or part thereof which shows improper operation, improper maintenance, abuse, neglect, damage or modification after shipment from factory.

(4) Any product or part thereof damaged or lost in shipment. Inspection for damage should be made before acceptance or signing any delivery documents releasing responsibility of the delivering carrier.

This warranty and foregoing obligations are in lieu of all other obligations and liabilities including negligence and all warranties of merchantability or otherwise, express or implied in fact or by law.

E. D. ETNYRE & CO., Oregon, Illinois 61061-9778
1333 South Daysville Road Phone: 815/732-2116 Fax: 815-732-7400

WARNING

Unsafe operation of equipment may cause injury.
Read, understand and follow the manuals when operating or performing maintenance.

Remain clear of all moving parts.

The fuel tank is part of the crosswalk. Do not drill or weld in this area.

Never put hands in between gate and spread roll or gate and rear of hopper. The gate could move at any time and cause severe injury.

Do not travel with the seat unlatched. Seat movement could occur causing disorientation and possible loss of control.

Shift in and out of "travel" only while stopped or moving at a very slow rate of speed. Shifts between "chip" and "travel" are very abrupt and could cause personal injury.

When two people are required to perform adjustments or maintenance operations or two people are simultaneously performing different operations, the work must be coordinated between the two people to avoid possible injuries.

IMPORTANT

Do not tow the chipspreader before reading the towing instructions. Improper towing may damage the hydraulic motors.

CAUTION

Make certain everyone is clear of machine before starting engine or operation.

Always use steps, platforms and handrails provided.

Remain clear of moving or rotating parts.

Always have shields, covers and guards in place when operating.

Keep loose clothing away from conveyor area when operating conveyor clutches.

Always install locking control box cover and chock wheels when leaving machine unattended as protection against vandallism and accidental movement.

Before operating the chipspreader, make an inspection of the machine to be sure that the machine is in a safe condition to operate.

The seat must always be latched during travel.

To avoid potential damage to electrical components disconnect batteries fefore welding.

Since all functions except power steering and brakes are electrically controlled, turning the ignition key to "off" results in an emergency stop.

CAUTION

Before breaking the seal on all hydraulic fittings, fill caps, etc. be sure to clean around the connection. Failure to do so may cause contaminants to enter the hydraulic system causing damage to pumps, motors, etc.

Table of Contents

HOW TO ORDER PARTS 1
WARRANTY 1

GENERAL
REPORTING SAFETY DEFECTS 4

DECALS & ID
Caution and Instruction Plates..... 5
General Identification..... 6

CONTROLS
Control Console Assembly 8
Console / Seat Assembly..... 10
Power Seat (Optional) 12

OPTIONAL CAB
Optional Cab & Controls..... 14
Optional Cab Harness Assembly..... 16
Optional Cab Harness Wiring 18
Hydraulic Schematic - Optional Cab Power Seat..... 20

HOPPER ASSEMBLIES
Hopper Assembly and Drive 22
Gate Actuating Lever Assembly and Power Gate Opener 24
Gate Assemblies - 6 and 12 inch..... 26
Segregator Assembly (Optional)..... 27
Gate Latch Controls..... 28
Hydraulic IndividualGate Control (Optional) 30

HYDRAULIC
Front Drive Motor Installation 32
Hydraulic Tank Plumbing..... 33
Hydraulic Pumps and Rear Motor - 4WD 34
HydraulicPumps - 2WD 36

HITCH & CONVEYOR
Hitch Assembly & Controls 38
Conveyor Motors and Hydraulic Block Plumbing 40
Conveyor Arrangement..... 42
Brake and Steering Hoses - 4WD 44
Brake and Steering Hoses - 2WD 45

ENGINE
Radiator / Cooler / Motor Mounts and Axle Connections 46
Air Intake Assemblies 48
Exhaust Assembly 49

MISCELLANEOUS
Suction Line Installation..... 50
Hopper Material Level Mechanism 51
Hood Assemblies..... 52
Engine & Conveyor Covers - Decking..... 53
Handrails and Ladders 54
Battery Box Installation..... 55
Power Buss Bar Assembly 56
Tire and Wheel - 2WD and 4WD 57
Flashing / Rear Liner 58

AXLE ASSEMBLIES
Carrier Assembly - 1300 for Axle Asm 3111284 59
Carrier Assembly - 1350 - for Axle Asm 3111285 60
Outer End - P1350..... 61
Steering Cylinder..... 62
Wet Disc Brake Wheel End - 3.65 Reduction..... 63

Hydraulic Tube Fitting “O” Ring Seals 64
Decimal Equivalent Chart..... 65

INDEX..... 66

COMMENT / SUGGESTION FORM 70

©Copyright 1998 E. D. ETNYRE & CO. All rights reserved.
No part of this publication may be reproduced by any means, electronic or mechanical, without the express permission of E. D. ETNYRE & CO. The enclosed drawings remain the property of E. D. ETNYRE & CO. and no part may be copied or used without the express permission of E. D. ETNYRE & CO.

REPORTING SAFETY DEFECTS

If you believe that your vehicle has a defect which could cause a crash, injury, or death, you should immediately inform the National Highway Traffic Safety Administration (NHTSA) in addition to notifying E.D. Etnyre & Co.

If NHTSA receives similar complaints, it may open an investigation. If it finds a safety defect exists in a group of vehicles, it may order a recall and remedy campaign. However, NHTSA cannot become involved in individual problems between you, your dealer, or E.D. Etnyre & Co.

To contact NHTSA, you may call the Auto Safety Hotline toll-free at 1-800-424-9393 (or 366-0123 in the Washington, D.C. area). Or, you may write to: U.S. Department of Transportation, Washington, D.C. 20696. You may also obtain other information about motor vehicle safety from the Auto Safety Hotline.

E.D. Etnyre & Co., Oregon, Illinois 61061, Phone Area Code 815/732-2116, Cable Address "EDECO". CALIFORNIA

This manual covers standard features and options. If your unit incorporates custon features, some of the information contained in this manual may not apply. If you have any questions regarding this manual of your unit, contact your dealer or the E. D. Etnyre Service Department at 1-800-995-2116

CALIFORNIA
Proposition 65 WARNING
Diesel engine exhaust and some of its constituents are known to the State of California to cause cancer, birth defects, and other reproductive harm.

Please note this warning and remember -
Always start and operate the engine in a well ventilated area;
If in an enclosed area, vent the exhaust to the outside;
Do not modify or tamper with the exhaust system.

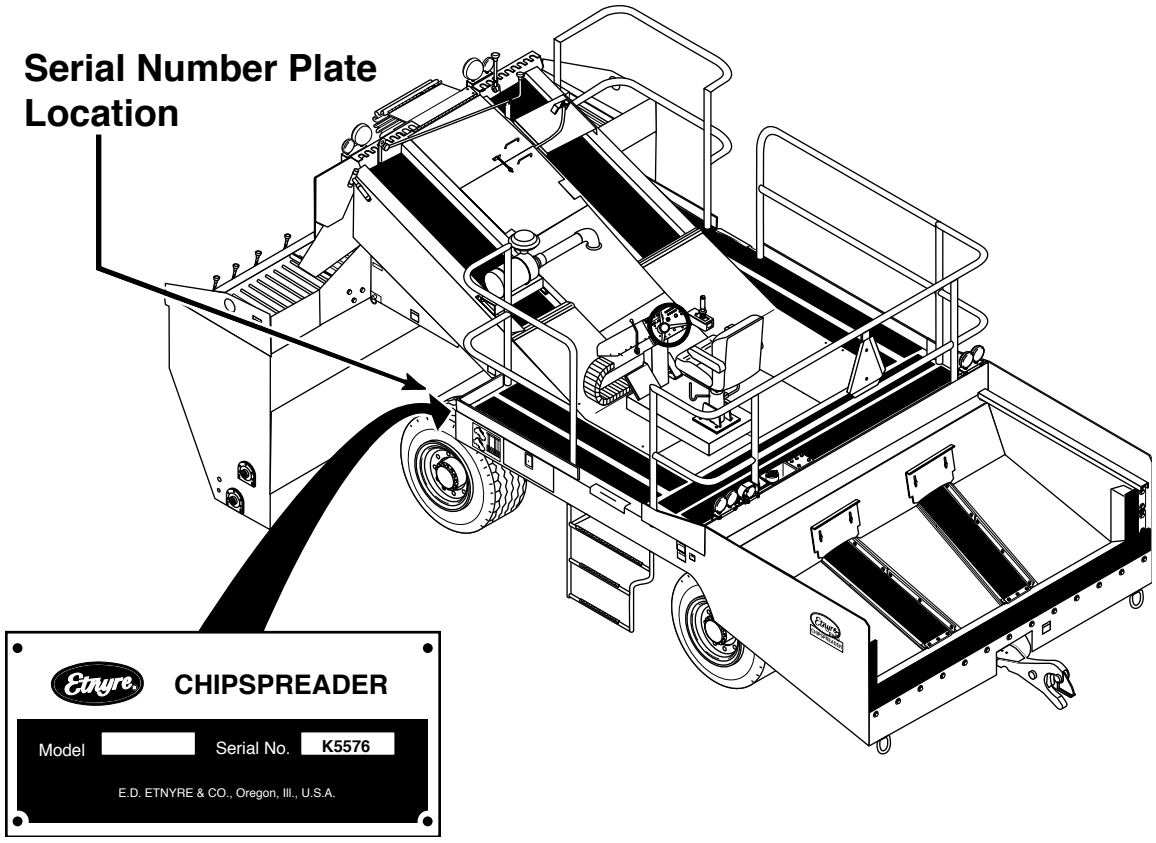

Caution and Instruction Plates

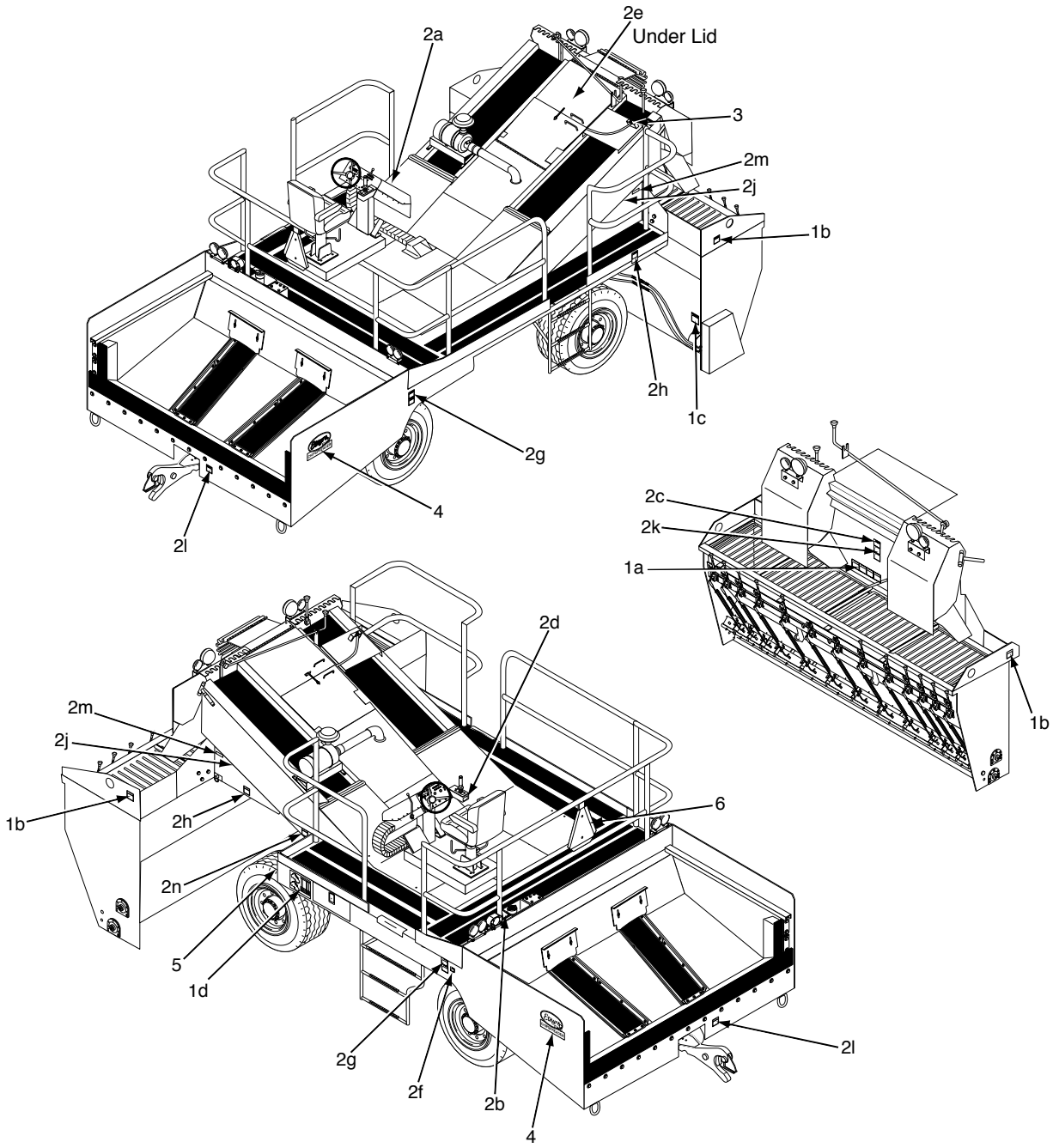

REF	PART NO.	QTY	DESCRIPTION
1	3103066	1	Decal Set, Chips Hopper Std.
a	3102066-A	1	Caution: Shields, Warning: Clear & Read
b	3102066-B	2	Caution: Shields, Warning: Clear
c	3102066-C	1	Notice: Hose Disconnect
d	3102066-D	1	Lubrication Chart
2	3102065	1	Decal Set, Chipspreader Body
a	3102065-A	1	Warning: Injury, Read, Brake
b	3102065-B	1	Warning: Fuel Tank, Fill
c	3102065-C	1	Warning: No Drill
d	3102065-D	1	Warning: No Shift
e	3102065-E	1	Anti-Freeze
f	3102065-F	1	Proposition 65 Warning
g	3102065-G	2	Warning: No Drill, Caution: Towing
h	3102065-H	2	Warning: Clear, Caution: Towing
j	3102065-J	2	Warning: Hydraulic Tank
k	3102065-K	1	Warning: Clear, Caution: Shields
l	3102065-L	1	Caution: Towing
m	3102065-M	2	Grease Daily
n	3102065-N	1	Caution: Valve
3	3101268	1	Plate-Hyd Hitch Release
4	3101999	2	Decal-Chipspreader, Fwd
	3102000	2	Decal-Chipspreader, Quad
5	3100689	1	Nameplate-Chipspreader, Brass
6	6000758	1	Emblem-Vehicle, Slow Moving

General Identification

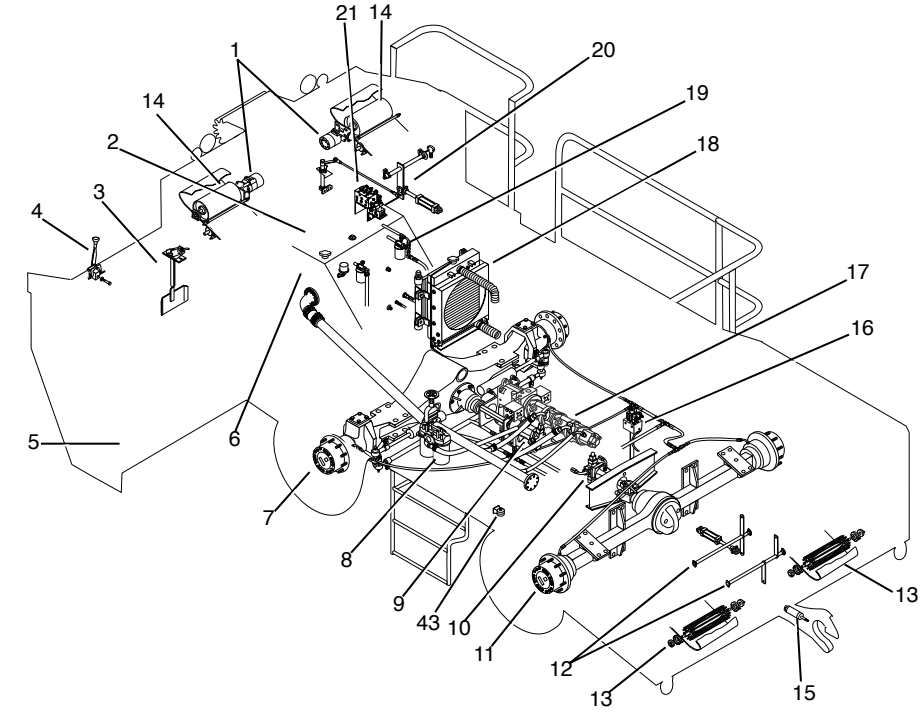

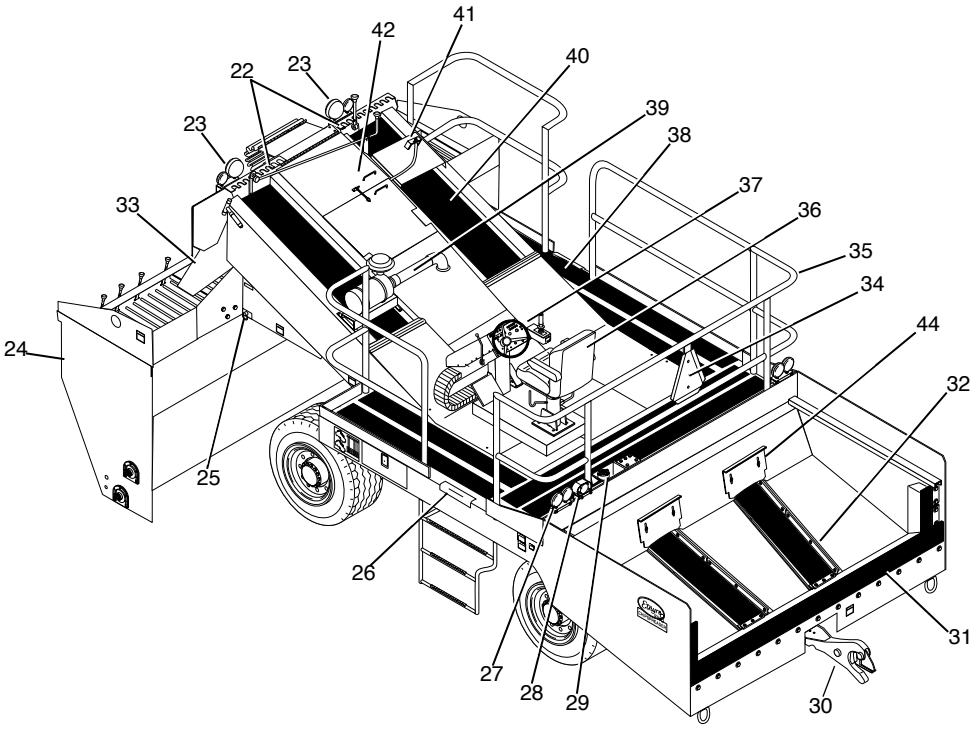

General Identification

REF	PART NO.	QTY	DESCRIPTION
1		2	Conveyor Drive Motors
2		1	Valve
3		2	Material Control Paddle
4		AR	Gate Lever
5		AR	Gates
6		1	Hydraulic Resevoir
7		1	Front Axle Drive
8		2	Suction Filters
9		1	Front Hydraulic Motor
10		1	Rear Hydraulic Motor
11		1	Rear Axle Drive (4WD Shown)
12		2	Hitch Position Linkage
13		2	Tail Pulley Asm
14		2	Head Pulley Asm
15		1	Hitch Release Cylinder
16		1	Manifold-Hitch/Pwr Steer/Brake
17		4	Hydraulic Pumps
18		1	Radiator
19		2	Return Filters
20		1	Gate Actuating Lever Asm
21		1	Manifold-Conveyor/Spreadroll
22		2	Conveyor Hood Asms
23	3160104	1	Head Light Asm-LT.
	3160105	1	Head Light Asm-RT.
24		1	Hopper Asm
25		2	Hopper Latch Pin
26		2	Rough Tread Step
27	3160692	1	Light Asm-STOP/TURN/TAIL, RH
	3160693	1	Light Asm-STOP/TURN/TAIL, LH
28	3160688	1	Back Up Alarm Asm
29		1	Fuel Tank
30		1	Hitch
31		AR	Rear Lining
32		AR	Flashing
33		1	Material Separator
34		1	Slow Moving Emblem
35		4	Handrails
36		1	Seat Assembly
37		1	Control Console Asm
38		AR	Rough Tread
39		1	Air Intake Asm
40		2	Conveyor Belt
41		1	Hitch Release
42		10	Engine/Conveyor Covers/Decking
43	3160067	1	Horn-12 Volt 17-3084
44	3130406	2	Gate-Flow, Rear Hopper Conveyor

REF	PART NO.	QTY	DESCRIPTION

AR - AS REQUIRED

Control Console Assembly

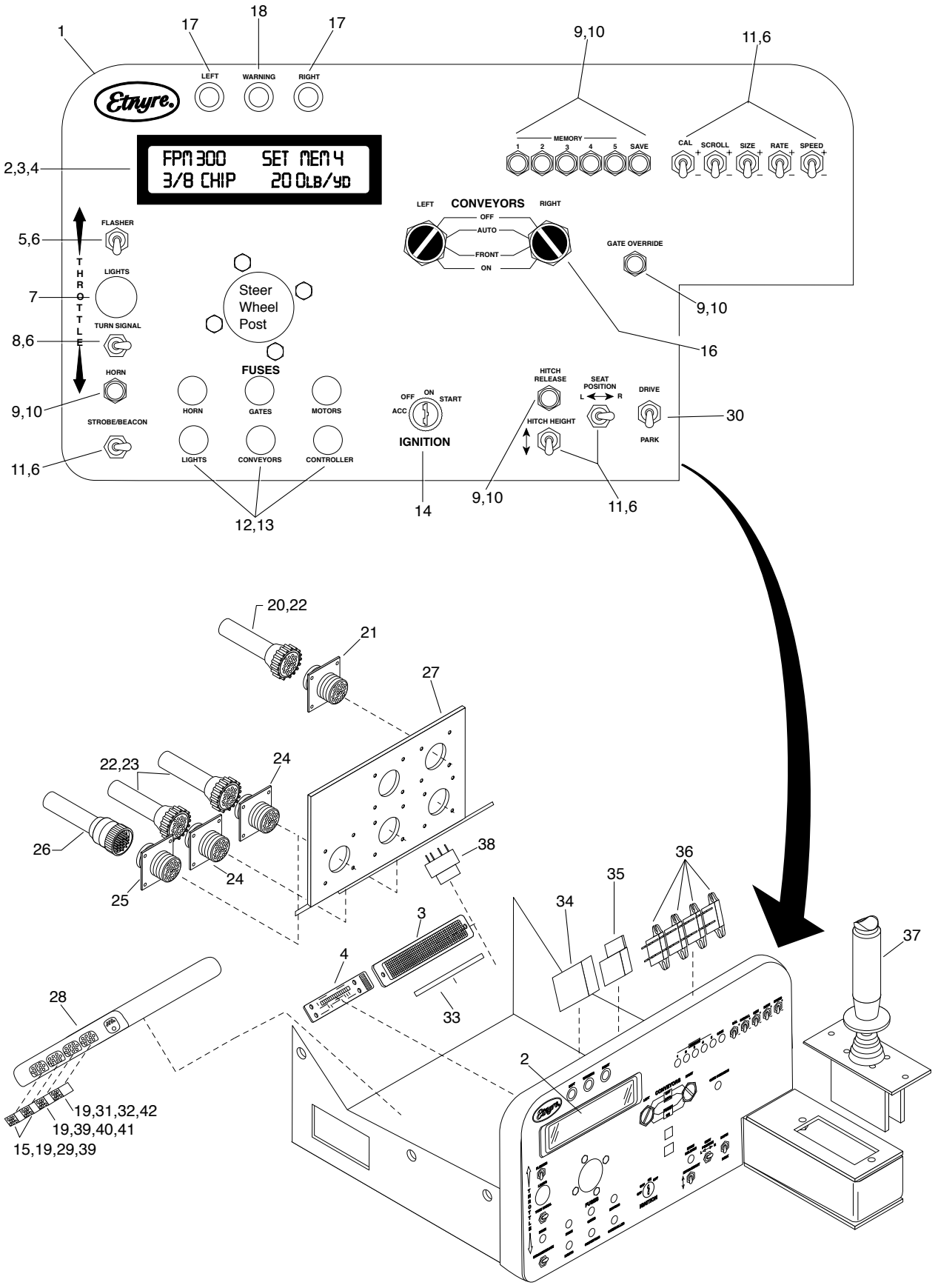

Specify Unit Serial No., Part No., & Part Description

Control Console Assembly

REF	PART NO.	QTY	DESCRIPTION
1	3150816	1	Overlay-Control Panel, Fixed Hopper
2	6702224	1	BEZEL-Display, Sealed, IEE
3	6702333	1	Display-LCD, 2 Line, 20 Char, Pos
4	6702194	1	Circuit Board-Display Driver
5	6700772	1	Switch-Toggle, DPST, 2 Pos, Maint.
6	6700164	10	Seal-Toggle Switch, 34B370AL/Radio
7	6700188	1	Switch-Push/Pull
8	6700771	1	Switch-Toggle, SPDT, 3 Pos, Maint.
9	6701467	8	Switch-Push Button, Mon, N.O.
10	6701468	8	Seal-Push Button, 1.68 x 0.62 Bush
11	6700161	9	Switch-Toggle, SPDT, MOM
12	6700139	6	B/Fuse-20 AMP, SFE20SAE SPJ554
	6703153	6	Seal-Pushbutton, Clear
13	3160040	6	Fuseholder-Buss Panel Mounted
14	6702028	1	Switch-IGN, OFF, IGN, ST, “NARR”
15	6702545	2	Connector-24 Pin Socket HS
16	6702029	2	Switch-3 Pos. Selector “NARR”
17	6700750	2	Light-Pilot, Amber, No. PL-20
18	6700072	1	Light-Pilot, Red, No. PL-20
19	6702546	AR	Contact-Socket, 18-26 AWG, GO
20	6701946	1	Plug-24 Pin, Std
21	6701938	1	Receptacle-Square, 24 Pin
22	6701951	3	Seal-Cable Entry, 23
23	6701949	2	Plug-37 Pin, Std
24	6701940	2	Recepticle-Square, 37 Pin
25	6702227	1	Receptacle 97-MS3102A-24-115
26	6702228	1	Plug 97-MS3106A-24-11P
27	3160696	1	Mount-Crl Panel Connectors
28	6702526	1	Computer-Chip, REXROTH MDC1-1
29	6702549	2	Strain Relief-Conn., 24 Pin
30	6702555	1	Switch-Tgl., Pto, Lock Off, 2 Pos
31	6702547	1	Strain Relief-Conn., 15 Pin
32	6702550	1	Grommet-Conn., 15 Pin
33	6700306	1	Strip-Terminal, 10 Bar
34	6700921	1	Flasher-12 Volt, Neg. Ground
35	3160102	1	Relay-Horn R-132-167 SURHIT
36	6700923	4	Relay-DPDT, 10A, 12VDC Coil
37	3160655	1	Controller-Joystick
38	6702024	1	Alarm-Elec, Hydro, CHIPS WARNING
39	6702551	3	Grommet-Conn., 20-24 PI
40	6702544	1	Conn-20 Pin Socket HSNG
41	6702548	1	Strain Relief-Conn., 20 Pin
42	6702543	1	Conn-15 Pin HSNG

REF	PART NO.	QTY	DESCRIPTION

Console / Seat Assembly

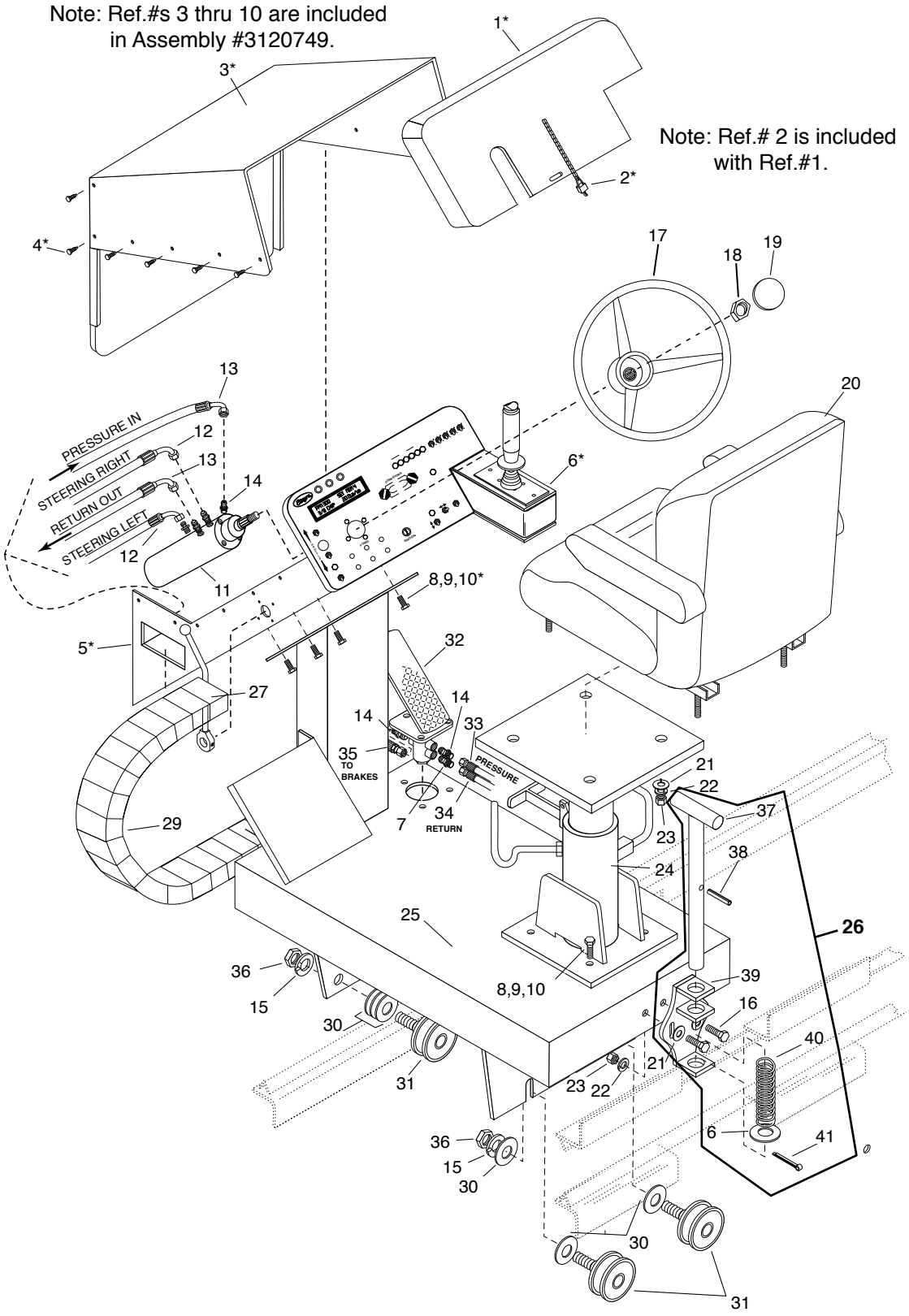

Specify Unit Serial No., Part No., & Part Description

Console / Seat Assembly

REF	PART NO.	QTY	DESCRIPTION
1	3150812	1	Cover Asm-Driver Control Panel
2	6000544	1	Padlk-Mstr. Lk# 500-C, W/Chain & Key
3	3120745	1	Rear & Upper Console Asm
4	6100174	10	Screw-Tap, HXSL, 0.25 x 0.75, B, PD
5	3120748	1	Lower Control Panel Asm
6	0131001	1	Washer-Flat, 0.88A(0.94 x 1.00)
7	6602363	1	Adapter-Hyd, ST, 08MB-04MJ
8	0120233	10	Screw-Hex, 0.38NC x 1.00, GR2, PD
9	0120382	10	Washer-Lock, 0.38, Spring, PD
10	0120377	10	Nut-Hex, 0.38NC, PD
11	3181080	1	Steering Unit-Hydrostatic
12	3181240	2	Hose Asm-08 x 198, 08FJX-08FJX90
13	3181239	2	Hose Asm-08 x 169, 08FJX-08FJX90
14	6601143	6	Adapter-Hyd, ST, 06MB-08MJ
15	0131046	4	Washer-Lock, 0.75, Spring, PD
16	0122017	4	Screw-Hex, 0.31NC x 1.00 GR2, PD
17	6601704	1	Wheel-Steering W/Hub, 15” Dia.
18	6601122	1	Nut-Steering Wheel, .812-20UNEF
19	6001054	1	Cap-Steering Wheel
20	6001148	1	Seat Asm-TRIMLINE W/Arm Rests
	7215236	1	Arm Rest - Left
	7215237	1	Arm Rest - Right
21	0446363	6	Washer-Flat, 0.31A(0.38 x 0.88), PD
22	0120214	6	Washer-Lock, 0.31, Spring, PD
23	0120376	6	Nut-Hex, 0.31NC, PD
24	6001079	1	Pedestal-Seat, Chips
25	3120756	1	Seat Base Asm
26	3150824	1	Latch Asm, Seat
			(Includes Ref #’s 6, 16, 21, 37-41)
27	6400359	1	Lever-Throttle Control, Side Mt.
28	3102032	1	Roller Chain Asm-Short
29	6602634	1	E-Chain, Enclosed, 7.5 Ft. Long
	6602635	1	E-Chain Mounting Kit
	7050981	1	Side Piece-LH
	7050982	1	Side Piece-RH
	7050983	1	Replacement Section-1’
	7050104	1	Cover-Top
	7050105	1	Cover-Bottom
	7050106	1	Hinge-Top Cover
30	0131000	11	Washer-Flat, 0.75A(0.81 x 2.00), PD
31	6435459	4	Roller-V Groved Load Runner
32	6602603	1	Valve-Brake Actuating W/Pedal
	7430261	1	Seal Kit
	7430260	1	Pedal
	7430259	1	Cam
	7430258	1	Pin
	7430257	4	E-Ring
	7430256	1	Pin
	7430255	1	Base
	7430254	2	Cap Screw
	7430253	2	Washer
33	3181242	1	Hose Asm-08 x 162, 08FJX-08FJX90
34	3181247	1	Hose Asm-04 x 218, 04FJX90-04FJX
35	3181241	1	Hose Asm-08 x 152, 08FJX-08FJX90
36	0426099	4	Nut-Hex, 0.75NF, PD
37	3150760	1	Pin Asm, Hitch, Seat, CS, Hydro
38	0457008	1	Pin-Spring, 0.19 x 1.50, HV, PN
39	3150823	1	Retainer Asm, Latch
40	3150764	1	Spring, Comp, Pin, Hitch
41	0103411	1	Pin-Cotter, 0.19 x 2.00, PD

Power Seat
(Optional)

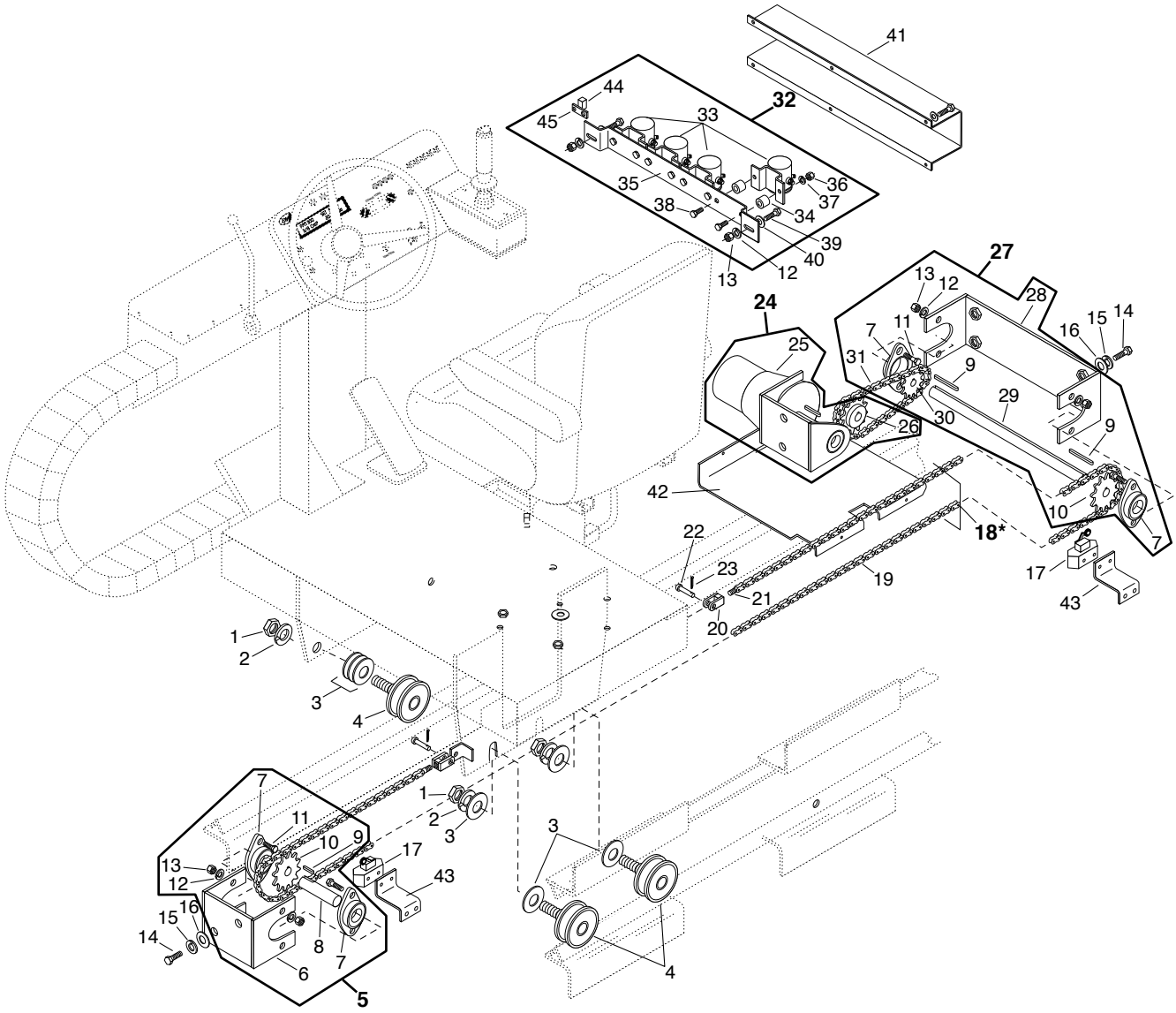

Specify Unit Serial No., Part No., & Part Description

Power Seat
(Optional)

REF	PART NO.	QTY	DESCRIPTION
1	0220086	4	Nut-Hex, 0.75NC, PD
2	0131046	4	Washer-Lock, 0.75, Spring, PD
3	0131000	10	Washer-Flat, 0.75A(0.81 x 2.00), PD
4	6435459	4	Roller-V Grooved Load Runner
5	3102034	1	Bracket Asm-Idler, Power
			(Includes Ref #'s 6-13)
6	3101992	1	Idler Shaft Support Asm
7	6420105	4	Flange Brg-Ball, 2 Blt. 0.75STMP
8	3101987	1	Idler Shaft-Power Seat
9	6000207	4	Key-0.19x 0.19CR x 1.00 Rd End
10	3102022	2	Sprocket-0.75 Bore
11	6100277	8	Screw-RdSqNkBlt, 0.31NC x 1.00, GR5
12	0120214	10	Washer-Lock, 0.31, Spring, PD
13	0120376	10	Nut-Hex, 0.31NC, PD
14	0120233	6	Screw-Hex, 0.38NC x 1,00, GR2, PD
15	0120388	6	Washer-Flat, 0.375, Wide
16	0120382	6	Washer-Lock, 0.38, Spring, PD
17	6700748	2	Switch-Actuating Low Level Ind.
18	3102031	1	Roller Chain Asm-Long
			(Includes Ref #'s 19-21)
19	6430077	AR	Chain-Roller, 40 CULLMEN WHEEL
	6430164	2	Link-Conn. RC40-2
20	3350232	2	Female End-Adjustable Chain
21	3350231	2	Male End-Adjustable Chain
22	6000397	2	Rivet-RdHd, 0.25 x 0.88, Drilled
23	0103374	2	Pin-Cotter, 0.09 x 1.00, PD
24	3102030	1	Winch Asm
			(Includes Ref #'s 25, 26)
25	6702537	1	Winch-1-1/4 Drum, 3/8" Keyway
26	3102021	1	Sprocket-1.25 Bore
27	3102033	1	Bracket Asm
			(Includes Ref #'s 7, 9-13, 28-31)
28	3101991	1	Drive Shaft Support Asm
29	3101988	1	Drive Shaft-Power Seat
30	6430171	1	Sprocket-RC40 x 1, 11T, B, 0.75
31	3102032	1	Roller Chain Asm-Short
32	3102035	1	Relay Asm-Power Seat
			(Includes Ref #'s 12, 13, 34-40, 44, 45)
33	6702014	4	Relay, Solenoid, Starter, Remote
34	6702015	8	Isolator-Relay
35	3102024	1	Bracket-Seat Relay
36	0120375	8	Nut-Hex, 0.25NC, PD
37	0120380	8	Washer-Lock, 0.25, Spring, PD
38	0120706	8	Screw-Hex, 0.25NC x 0.50, GR2, PD
39	0121661	2	Screw-Hex, 0.25NC x 1.00, GR2, PD
40	0446363	2	Washer-Flat, 0.31A(0.38 x 0.88), PD
41	3120783	1	Cover-Relay Brkt
42	3120784	1	Cover-Winch
43	3350672	2	Bracket-Mounting Actuating Switch
44	6702542	1	Circuit Breaker-40 AMP
45	3102059	1	Mount-Circuit Breaker

AR - AS REQUIRED

Optional Cab & Controls

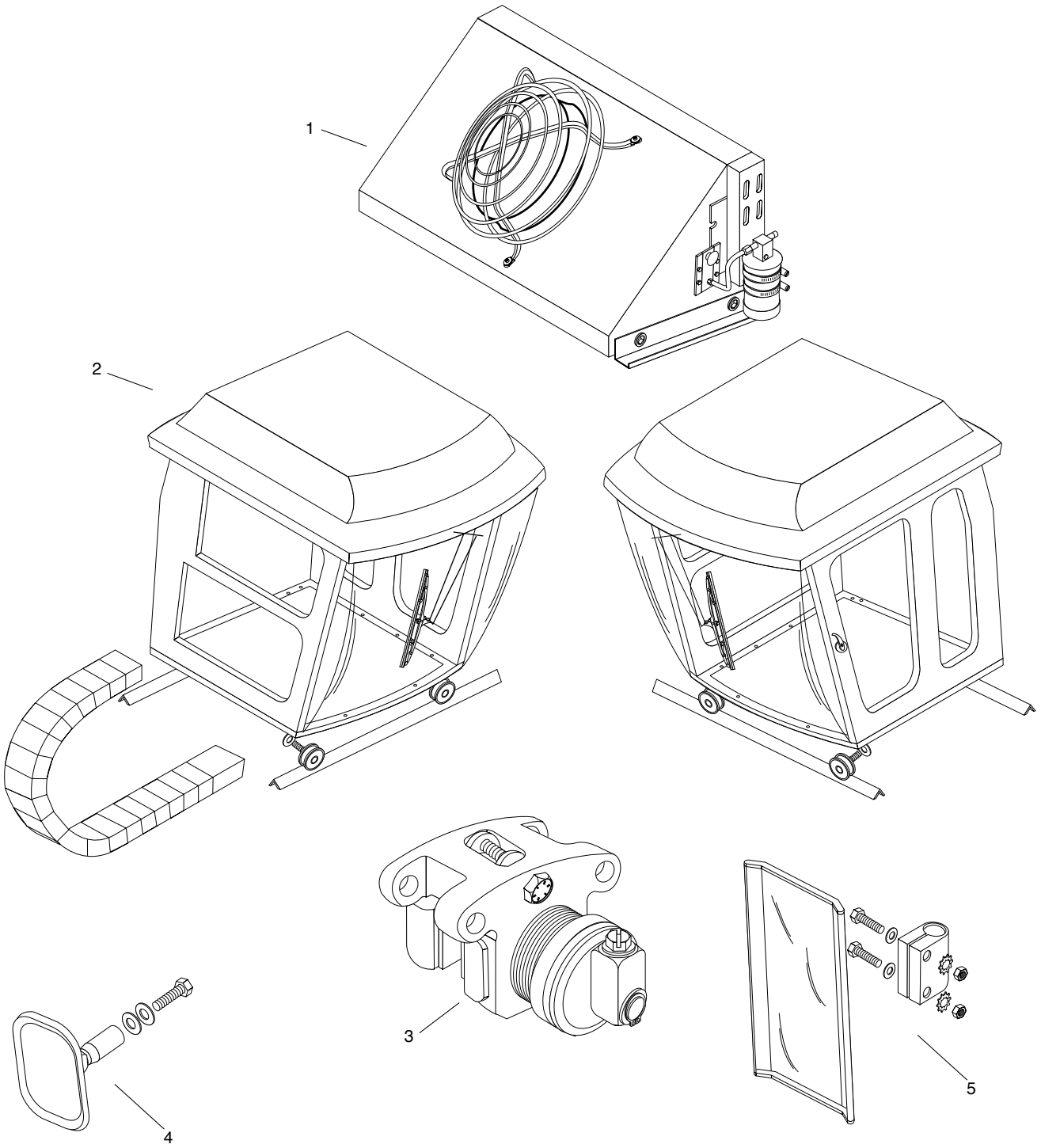

Optional Cab & Controls

REF	PART NO.	QTY	DESCRIPTION	REF	PART NO.	QTY	DESCRIPTION
1	6400604	1	Condenser				
2	******	1	Cab Enclosure				
3	6410080	1	Brake				
4	AH99409	1	Mirror-Head Asm				
5	AH142404	1	Mirror-Rear View				

*Order by illustration reference number. Specify this Parts Manual number, page number and your unit's Serial Number.

Optional Cab Harness Assembly

ITEM	DESCRIPTION	QTY
K	[illegible]	2
J	TWO WAY TUNER [illegible]	[illegible]
H	[illegible]	[illegible]
G	THREE WAY [illegible]	[illegible]
F	TWO WAY MOLDED SOCKET [illegible]	[illegible]
E	THREE WAY [illegible] SERIES MALE [illegible]	[illegible]
D	TWO WAY SHROUD [illegible]	[illegible]
C	ONE WAY [illegible] FEMALE [illegible]	[illegible]
A	SIX WAY SHROUD [illegible]	[illegible]

[illegible]	[illegible]	[illegible]	[illegible]	[illegible]	[illegible]	[illegible]	[illegible]	[illegible]	[illegible]
[illegible]	[illegible]	[illegible]	[illegible]	[illegible]	[illegible]	[illegible]	[illegible]	[illegible]	[illegible]

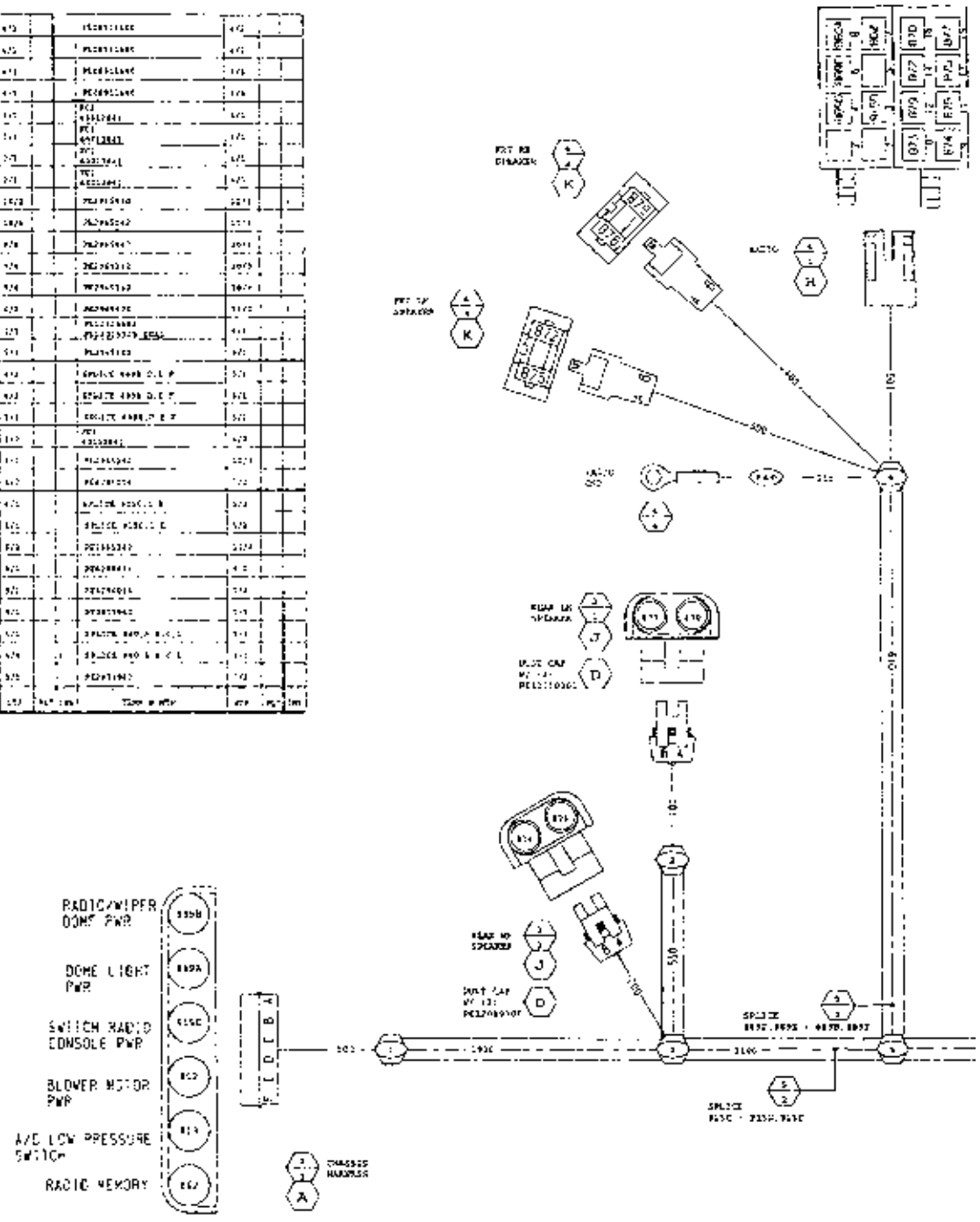

OPTIONAL CAB

Optional Cab Harness Assembly

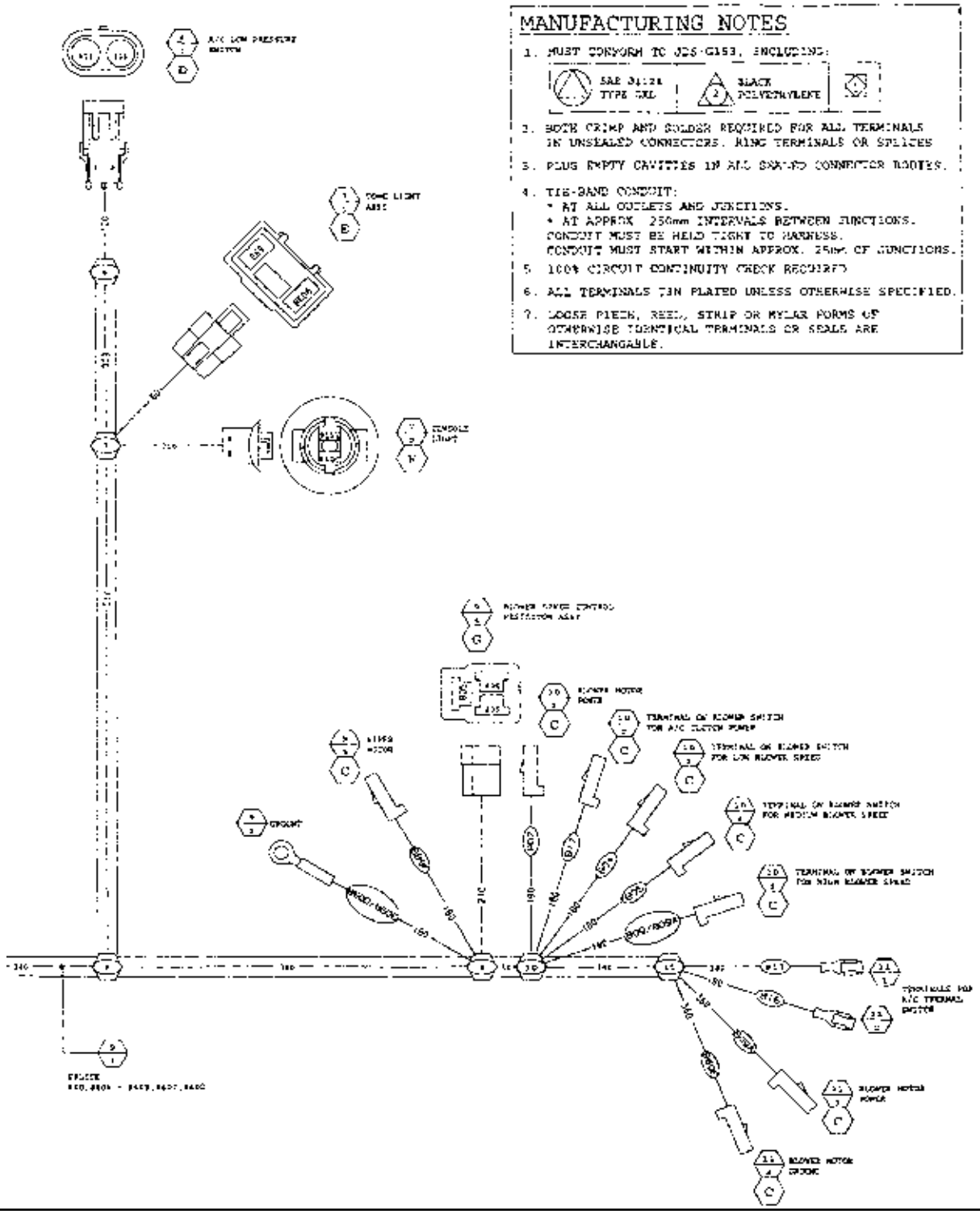

Optional Cab Harness Wiring

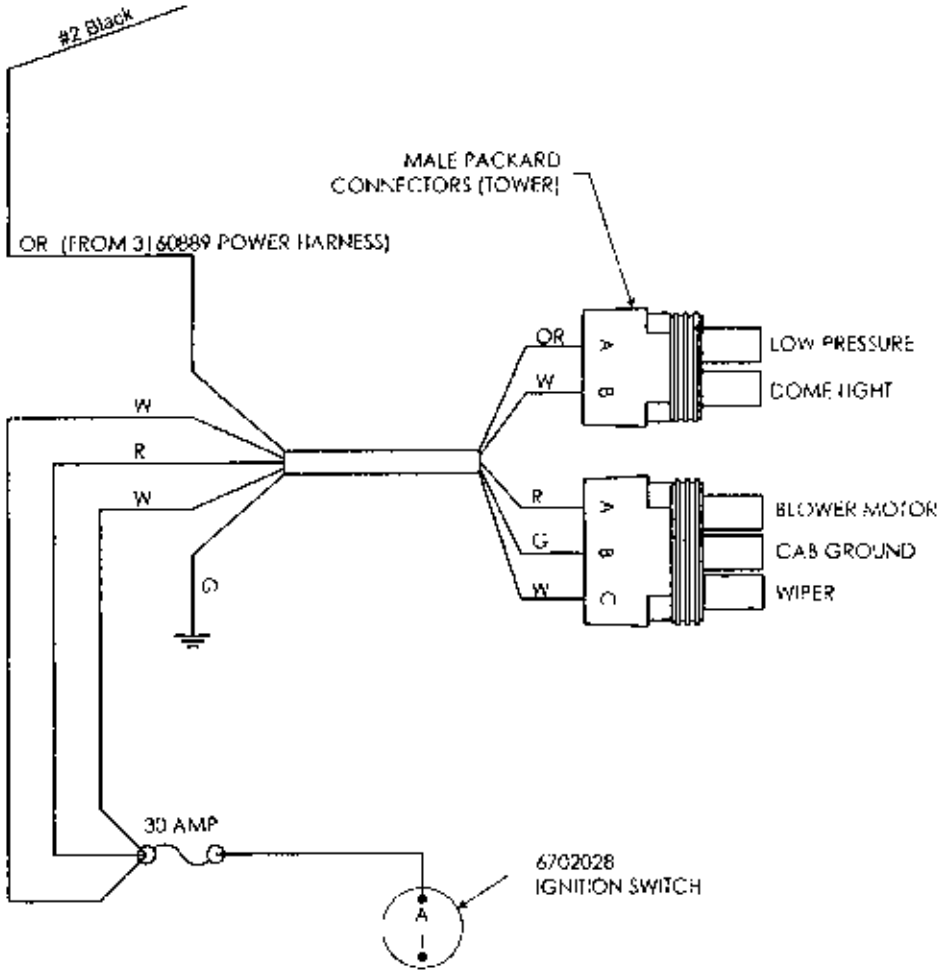

Optional Cab Harness Wiring

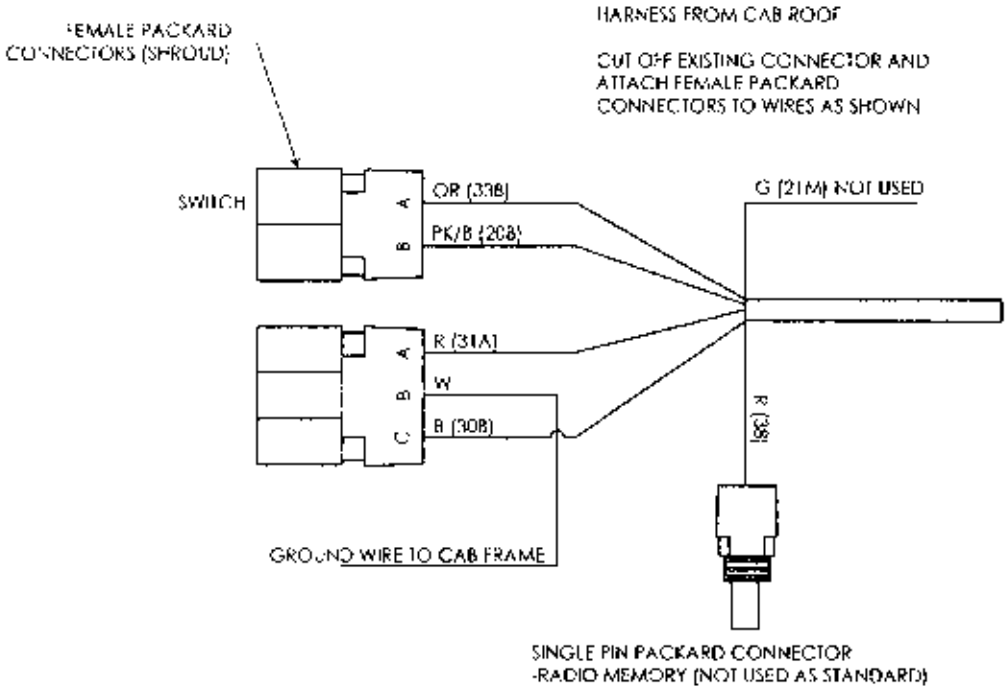

Hydraulic Schematic - Optional Cab Power Seat

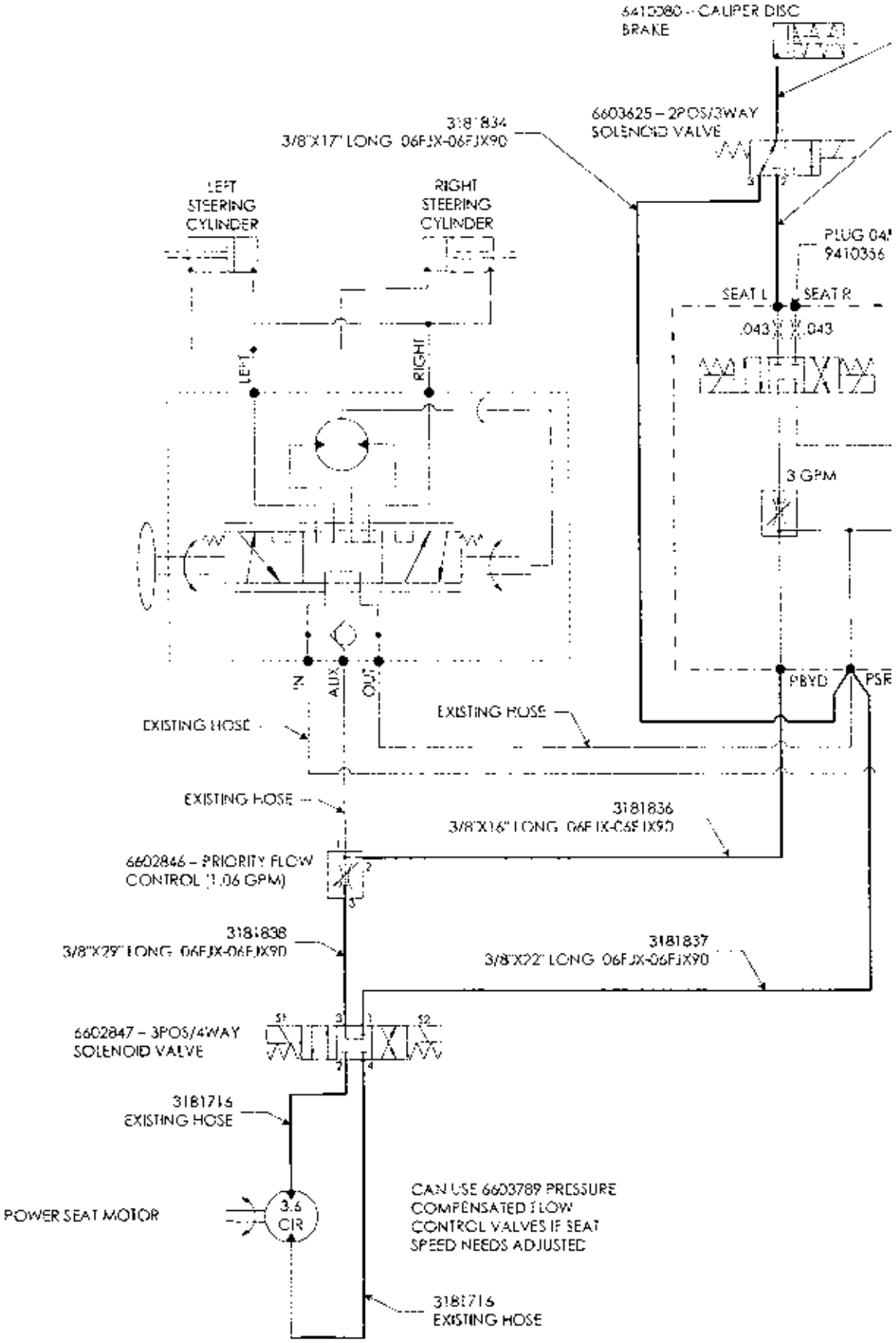

Optional Hydraulic Schematic - Cab Power Seat

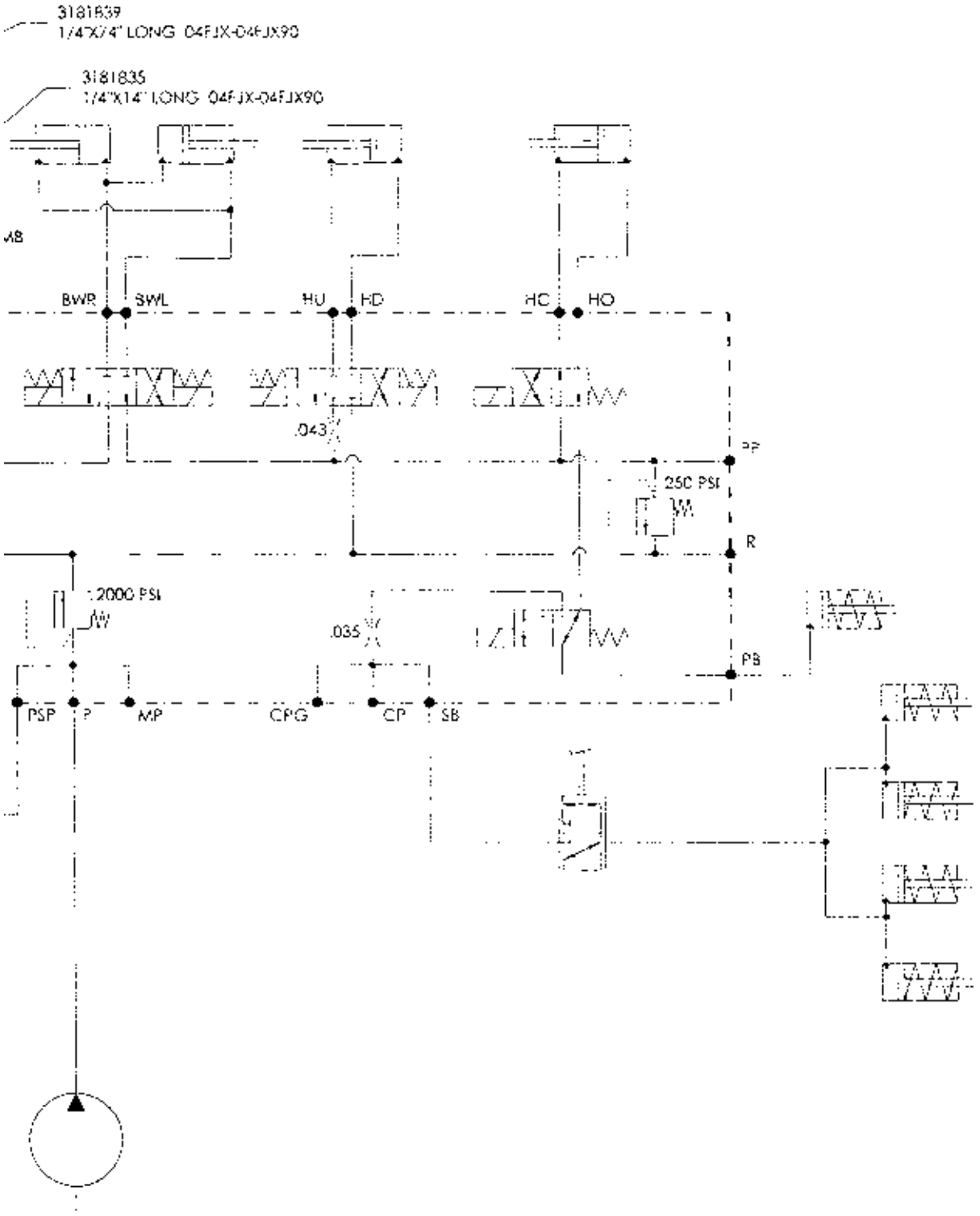

Hopper Assembly and Drive

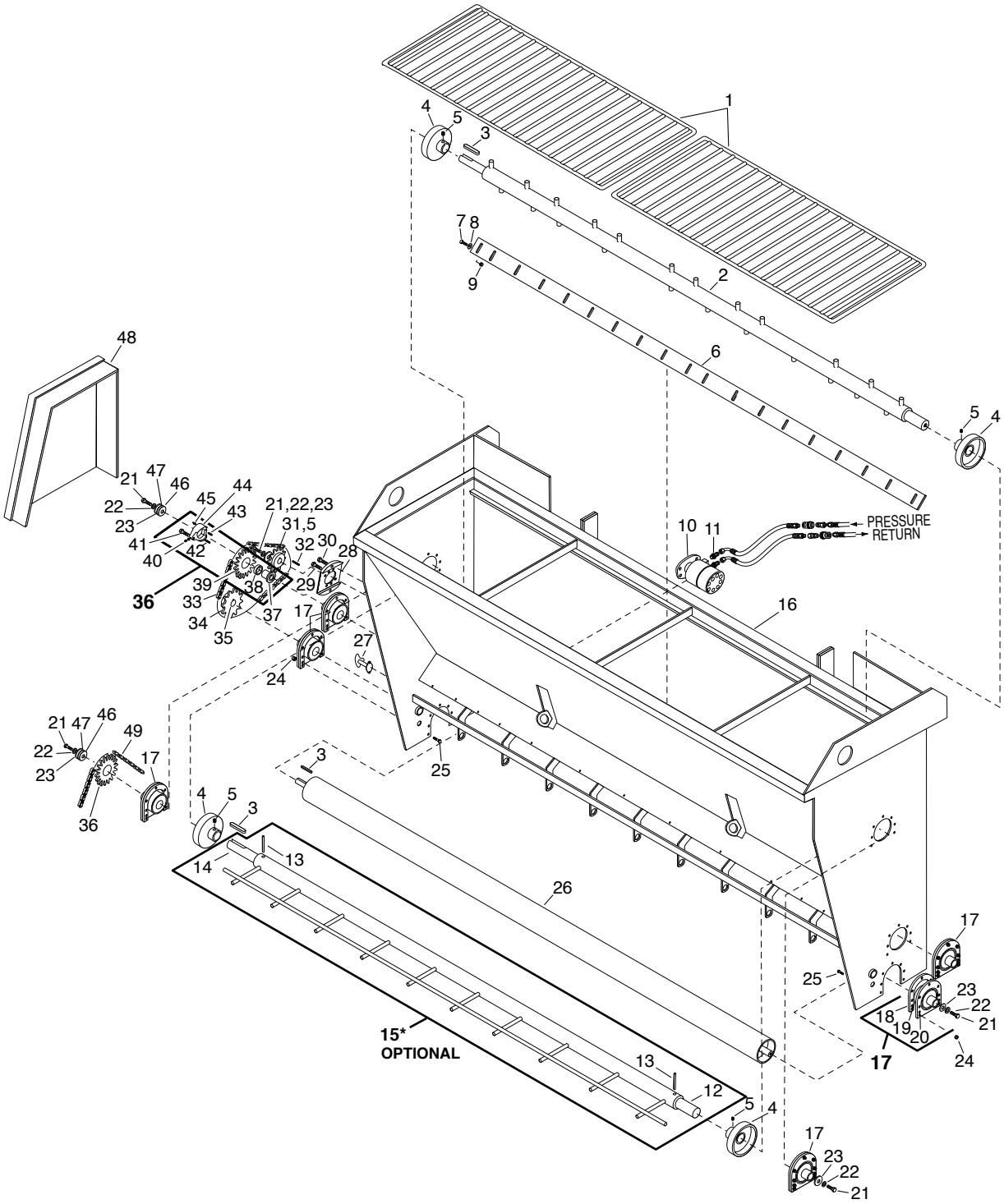

Specify Unit Serial No., Part No., & Part Description

Hopper Assembly and Drive

REF	PART NO.	QTY	DESCRIPTION
1	3140113	2	Grate Assy - 10Ft.
	3140114	2	Grate Assy - 11Ft.
	3140115	2	Grate Assy - 12Ft.
	3140116	2	Grate Assy - 13Ft.
	3140430	2	Grate Assy - 14Ft.
	3141071	2	Grate Assy - 15Ft.
2	3141176	1	Agitator Asm - 10Ft.
	3141177	1	Agitator Asm - 11Ft.
	3141178	1	Agitator Asm - 12Ft.
	3141179	1	Agitator Asm - 13Ft.
	3141180	1	Agitator Asm - 14Ft.
	3141181	1	Agitator Asm - 15Ft.
3	3170061	2	Key-0.38 x 0.38CR x 2.00, Rd End
4	3141190	2	Housing Asm-Bell
5	0102582	4	Screw-Sock, 0.31NC x 0.50, CUP, PN
6	3140364	1	Plate-Stop, 10Ft.
	3140365	1	Plate-Stop, 11Ft.
	3140366	1	Plate-Stop, 12Ft.
	3140367	1	Plate-Stop, 13Ft.
	3140442	1	Plate-Stop, 14Ft.
	3141083	1	Plate-Stop, 15Ft.
7	0121887	AR	Screw-Hex, 0.25NC x 0.75, GR2, PD
8	0120386	AR	Washer-Flat, 0.25A(0.31 x 0.73)
9	9413946	AR	Nut-Hex, Lock, 0.25NC, EA, PD
10	6602645	1	Motor-Hyd, Lsht, 12.0 Cir
11	6600910	2	Adapter-Hyd, ST, 10MB-12MJ
12	3140075	1	Shaft-Stat
13	6100082	2	Pin-Spring, 0.50 x 2.25, HV, PN
14	3141174	1	Shaft-Work, Agitator
15*	3141182	1	Agitator Asm-Sand, 10 Ft.
	3141183	1	Agitator Asm-Sand, 11 Ft.
	3141184	1	Agitator Asm-Sand, 12 Ft.
	3141185	1	Agitator Asm-Sand, 13 Ft.
	3141186	1	Agitator Asm-Sand, 14 Ft.
	3141181	1	Agitator Asm-Sand, 15 Ft.
16	3141210	1	Frame Asm-Hopper, 10Ft.
	3141211	1	Frame Asm-Hopper, 11Ft.
	3141212	1	Frame Asm-Hopper, 12Ft.
	3141213	1	Frame Asm-Hopper, 13Ft.
	3141214	1	Frame Asm-Hopper, 14Ft.
	3141219	1	Frame Asm-Hopper, 15Ft.
17	3141224	4	Brg/Housing Asm-Hopper *(Includes Ref #'s 18-20)*
18	3141143	1	Plate-Spacer, Bearing Housing
19	3140083	1	Bearing-Ag & Roll SC-25
20	3141146	1	Housing Asm-Bearing
21	0122408	2	Screw-Hex, 0.50NC x 1.00, GR2, PD
22	0120384	3	Washer-Lock, 0.50, Spring, PD
23	3140404	3	Disc-Shaft End Hopper
24	0120377	28	Nut-Hex, 0.38NC, PD
25	0122145	28	Screw-Hex, 0.38NC x 1.25 GR2, PD
26	3141154	1	Spreadroll Asm - 10Ft.
	3141156	1	Spreadroll Asm - 11Ft.
	3141158	1	Spreadroll Asm - 12Ft.
	3141160	1	Spreadroll Asm - 13Ft.
	3141162	1	Spreadroll Asm - 14Ft.
	3141164	1	Spreadroll Asm - 15Ft.
27	3100566	1	Hood Fastener-Straight 9663
28	3140587	1	Mount Asm-Hyd Motor
29	0120333	4	Screw-Hex, 0.50NC x 1.75, GR2, PDR5
30	0122459	2	Screw-Hex, 0.50NC x 2.00, GR2, PD
31	3140596	1	Sprocket-Hyd Motor, Hopper
32	3110033	1	Key-0.38 x 0.38CR x 1.25 Rd End
33	3140582	1	Chain-Roller, No. 80, 49 Link
34	3140249	1	Sprocket-Hyd Dr. No. 80QZZ
35	3110054	1	Bushing, No. Q1, 0.56 In.
36	3140243	1	Agitator Shaft Discon. Dr. Asm *(Includes Ref #'s 37-45)*
37	3140244	1	Housing-Male Disc.
38	3140247	1	Bearing-Ag Shaft Disc.
39	3140246	1	Sprocket-Ag Shaft Disc.
40	0223022	1	Screw-Sock, 0.25NC, x 0.62, HFDG, PN
41	3140248	1	Bolt-Ag Shaft Disc
42	3170059	1	Key-0.38 x 0.38CR x 1.38 Sq End
43	3100172	1	Key-0.38 x 0.38CR x 1.38 Rd End
44	3140245	1	Housing-Female Disc.
45	9411027	1	Fitting-Lub, Stgt. x 1/2 TYP C
46	3140401	AR	Spacer 1/16 In., Hopper
47	3140402	AR	Spacer 1/8 In., Hopper
48	3140638	1	Door Asm-Hopper Chain Guard
49	3140646	1	Chain-Roller *(Replaces Ref.# 33 for use with Ref.# 15-Optional Sand Agitator)*

AR - AS REQUIRED

Gate Actuating Lever Assembly and Power Gate Opener

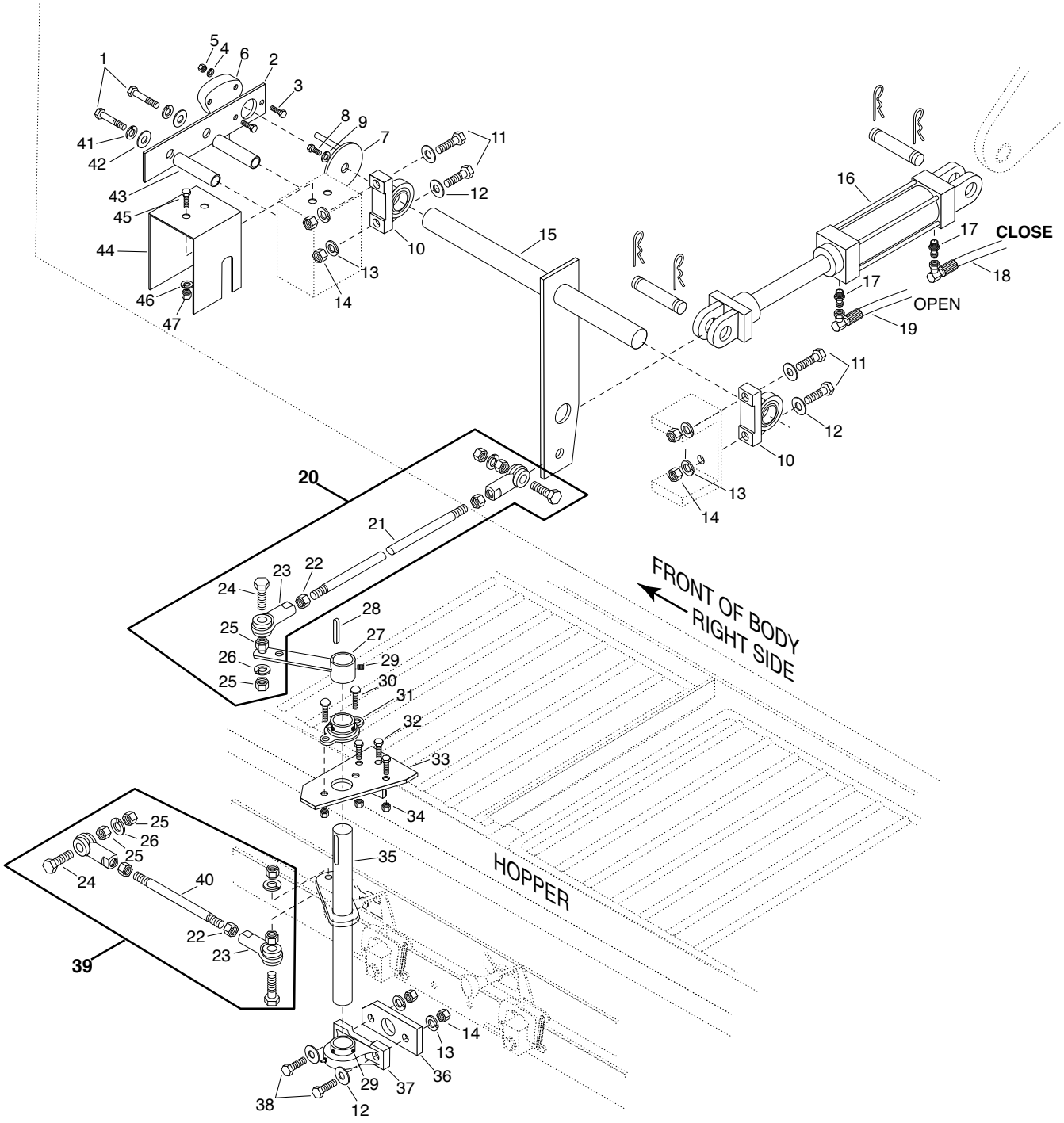

Specify Unit Serial No., Part No., & Part Description

Gate Actuating Lever Assembly and Power Gate Opener

REF	PART NO.	QTY	DESCRIPTION
1	0122207	2	Screw-Hex, 0.38NC x 3.00, GR2, PD
2	3120767	1	Mount-Arm, Gate Pot
3	0436699	2	Screw-Mach, PNSL, 8NC x 1.00, PD
4	0121841	2	Washer-Lock, NO. 8, Spring, PD
5	0120622	2	Nut-Hex, Mach, 8NC, PD
6	6702171	1	Pot-1K Linear, 65 Degf. Rotate, 10%
7	3160543	1	Plate & Pin Asm
8	0122007	1	Screw-Hex, 0.31 x 0.75, GR2, PD
9	0120214	1	Washer-Lock, 0.31, Spring, PD
10	6420066	2	Pillow Blk-Ball, 2 Bolt, 1.18
11	0120333	4	Screw-Hex, 0.50NC x 1.75, GR2, PDR5
12	0120390	6	Washer-Flat, 0.50A, W, PD
13	0120384	6	Washer-Lock, 0.50, Spring, PD
14	0120378	4	Nut-Hex, 0.50NC, PD
15	3102029	1	Arm -Transducer Shaft Asm
16	6601781	1	Cylinder-Hyd, 2.0 x 6.0
17	6601504	2	Adapter-Hyd, ST, 06MP-06MJ
18	3181283	1	Hose Asm-06 x 78, 06FJX90-06FJX
19	3181282	1	Hose Asm-06 x 96, 06FJX90-06FJX
20	3141141	1	Linkage Asm, Hydro Hopper, Forward *(Includes Ref #'s 21-26)*
21	3141140	1	Linkage-Hopper Fwd-Hydro
22	0121358	2	Nut-Hex, 0.62NF, PD
23	6100325	2	Rod End-Female, 0.62NF Thread
24	0428697	2	Screw-Hex, 0.63NC x 2.50, GR2, PD
25	0124589	4	Nut-Hex, 0.62NC, PD
26	0121574	2	Washer-Lock, 0.62, Spring, PD
27	3140649	1	Lever Asm-Gate Actuating
28	3170061	1	Key-0.38 x 0.38CR x 2.00 Rd End
29	6100035	7	Screw-Sock, 0.38NC x 0.38, Ser Pt
30	6000737	2	Bolt-Carriage, GR5, 0.38NC x 1.50
31	6420067	1	Flange Brg-Ball, 2 Bolt, 1.18 In.
32	0120233	3	Screw-Hex, 0.38NC x 1.00, GR2, PD
33	3140550	1	Mount Asm-Top Bearing, Hopper
34	0274993	5	Nut-Hex, Lock, 0.38NC, EA, PD
35	3140310	1	Shaft-Gate, Actuating Asm
36	3140553	1	Spacer-Bearing
37	6420066	1	Pillow Blk-Ball, 2 Bolt, 1.18 In.
38	0122459	2	Screw-Hex, 0.50NC x 2.00, GR2, PD
39	3140634	1	Linkage Asm-Parallel Bars *(Includes Ref #'s 22-26, 40)*
40	3140635	1	Linkage-Parallel Bars
41	0120382	2	Washer-Lock, 0.38, Spring, PD
42	0120388	2	Washer-Flat, 0.38A(0.44 x 1.00), PD
43	3102027	2	Spacer-Gate Pot Mount
44	3120770	1	Cover-Gate Transducer
45	0121887	2	Screw-Hex, 0.25NC x 1.00, GR2, PD
46	0120380	2	Washer-Lock, 0.25, Spring, PD
47	0120375	2	Nut-Hex, 0.25NC, PD

Gate Assemblies
6 and 12 inch

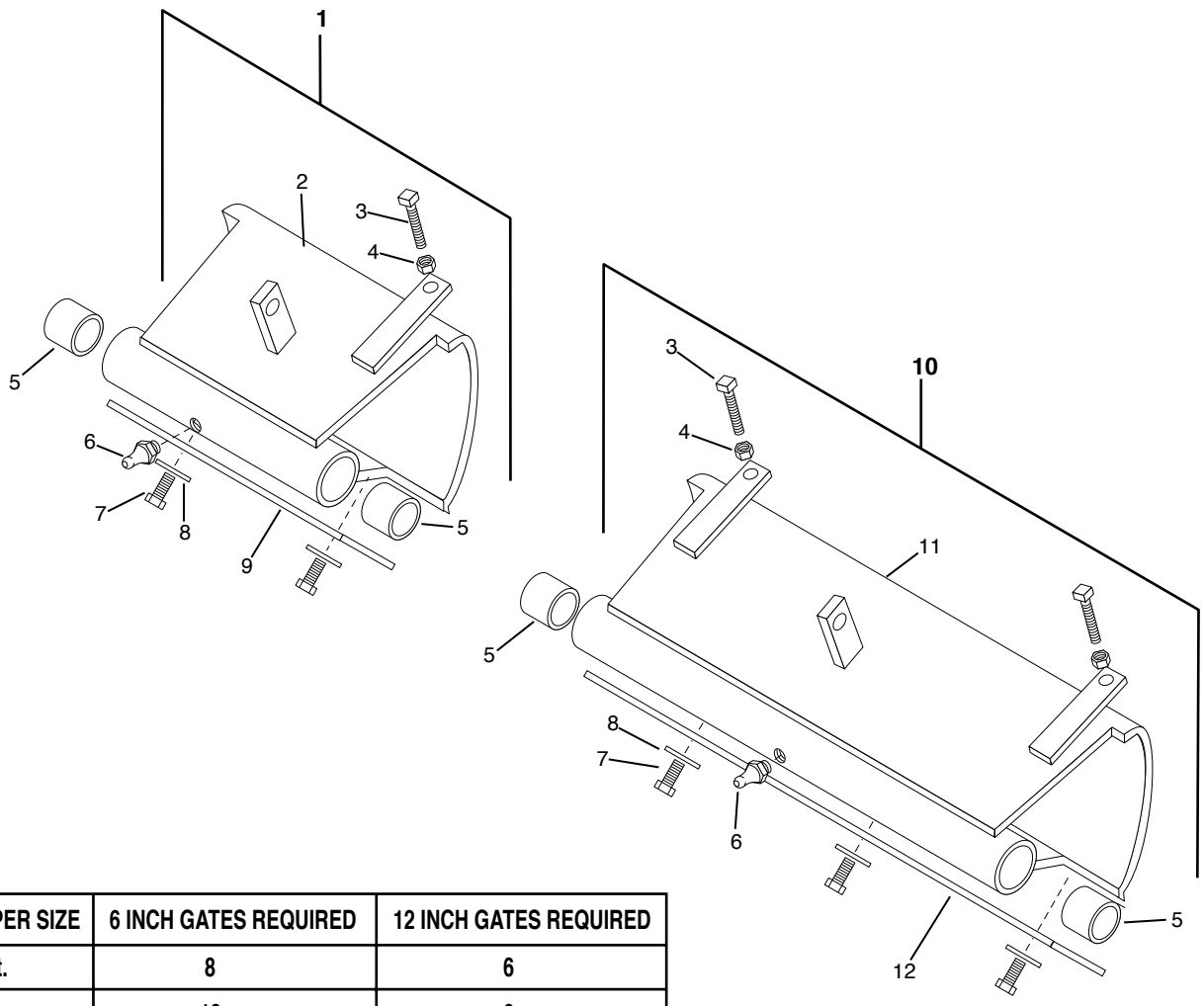

HOPPER SIZE	6 INCH GATES REQUIRED	12 INCH GATES REQUIRED
10 Ft.	8	6
11 Ft.	10	6
12 Ft.	12	6
13 Ft.	14	6
14 Ft.	12	8

REF	PART NO.	QTY	DESCRIPTION
1	3140498	AR	Gate Asm-6 In. Hopper
2	3140500	1	Frame Asm-Gate 6 In. Hopper
3	0120900	AR	Screw-SqHd, 0.38NC x 2.00, CUP, PD
4	0120377	AR	Nut-Hex, 0.38NC, PD
5	6000732	2	Bearing-Gate, Pivot, @AA-1339-2
6	9411027	1	Fitting-Lub, STGT x 1/2 TYP
7	3100475	AR	Hex Capsc Lg-Loc 0.38-16 x 0.75 Lg.
8	0120388	AR	Washer-Flat, 0.375, Wide
9	3140268	1	Scraper Plate, 6 In.
10	3140499	AR	Gate Asm-12 In. Hopper
11	3140501	1	Frame Asm-Gate 12 In. Hopper
12	3140264	1	Scraper Plate, 12 In.

AR - AS REQUIRED

Segregator Assembly

(Optional)

3140328 - 10’
3140329 - 11’
3140330 - 12’
3140331 - 13’
3140440 - 14’-15’

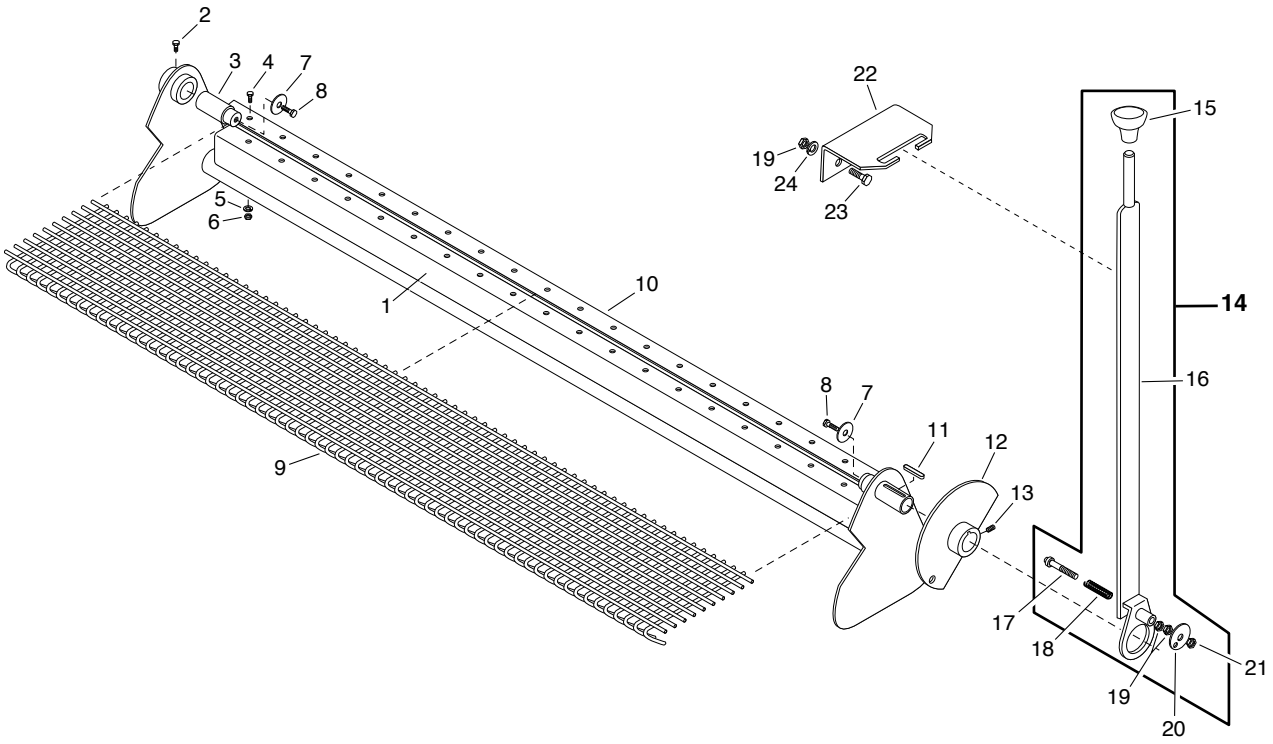

REF	PART NO.	QTY	DESCRIPTION
1	3140332	1	Frame-Segregator Asm, 10’
	3140333	1	Frame-Segregator Asm, 11’
	3140334	1	Frame-Segregator Asm, 12’
	3140335	1	Frame-Segregator Asm, 13’
	3140439	1	Frame-Segregator Asm, 14’
		1	Frame-Segregator Asm, 15’
2	0121852	1	Screw-Hex, 0.38NC x 0.50, GR2, PD
3	3140350	1	Pin-Pivot, Right
4	0121893	AR	Screw-Hex, 0.25NC x 0.88, GR2, PD
5	0120380	AR	Washer-Lock, 0.25, Spring, PD
6	0120375	AR	Nut-Hex, 0.25NC, PD
7	3140404	2	Disc-Shaft End, Hopper
8	0122408	2	Screw-Hex, 0.50NC x 1.00, GR2, PD
9	3100396	1	Wire Screen - 10’
	3100397	1	Wire Screen - 11’
	3100398	1	Wire Screen - 12’
	3100231	1	Wire Screen - 13’
	3140441	1	Wire Screen - 14’
		1	Wire Screen - 15’

REF	PART NO.	QTY	DESCRIPTION
10	3140344	1	Bar-Bolt, Screen, 10’
	3140345	1	Bar-Bolt, Screen, 11’
	3140346	1	Bar-Bolt, Screen, 12’
	3140347	1	Bar-Bolt, Screen, 13’
	3140348	1	Bar-Bolt, Screen, 14’
11	3170059	1	Key-0.38 x 0.38CR x 1.75, Rd End
12	3140363	1	Plate-Hub Adjusting Asm
13	6100035	1	Screw-Sock, 0.38NC x 0.38, Ser Pt
14	3140361	1	Handle Asm, Segregator *(Includes Ref #’s 15-21)*
15	3140029	1	Knob-Rubber
16	3140358	1	Handle-Welded Asm
17	3120060	1	Stud-Latch
18	3120059	1	Spring-Compression
19	0120377	4	Nut-Hex, 0.38NC, PD
20	3120056	1	Washer-Latch Lkg.
21	0274993	1	Nut-Hex, Lock, 0.38NC, PD
22	3140362	1	Latch-Handle
23	0120233	2	Screw-Hex, 0.38NC x 1.00, GR2, PD
24	0120382	2	Washer-Lock, 0.38, Spring, PD

AR - AS REQUIRED

Gate Latch Controls

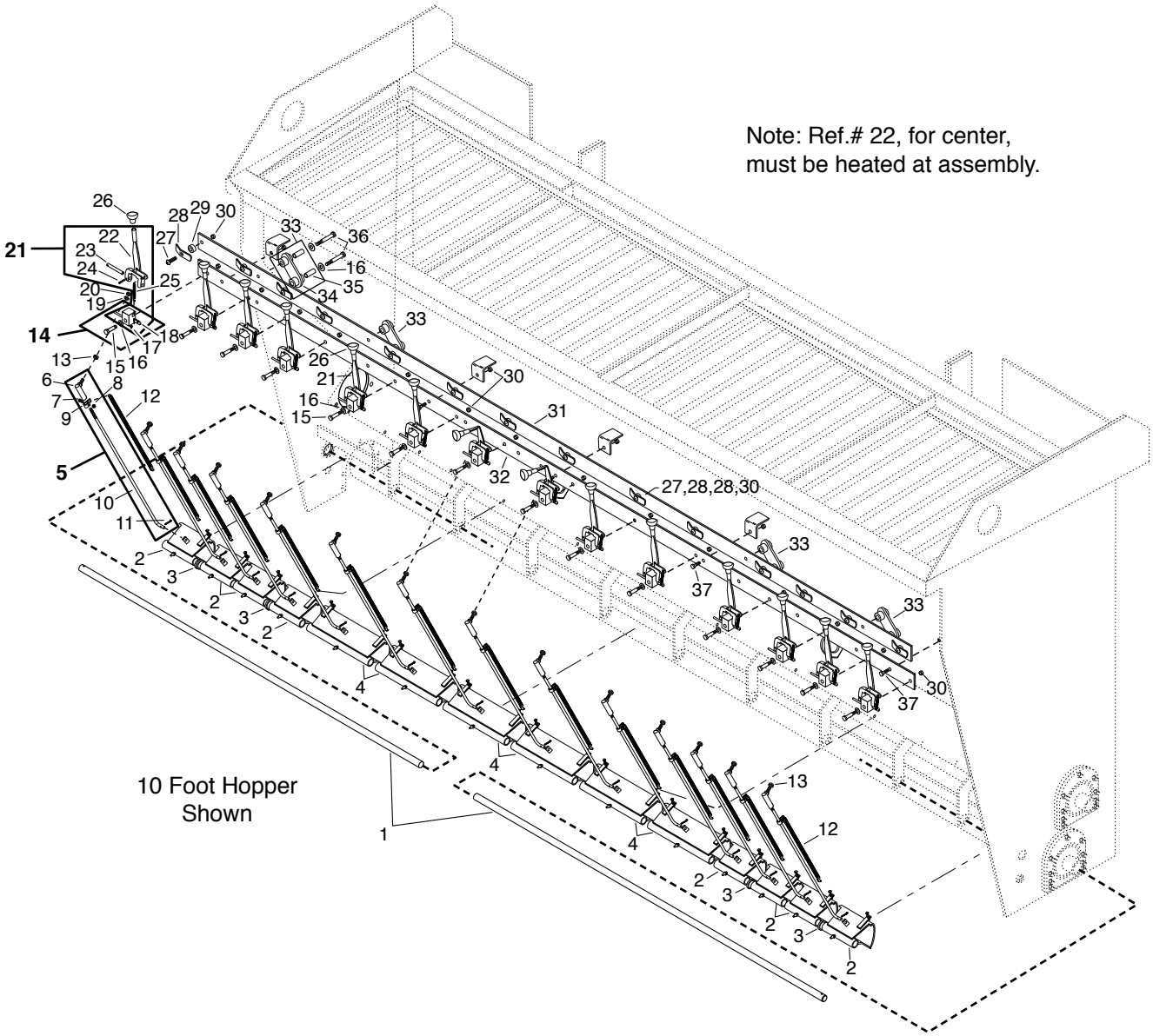

Specify Unit Serial No., Part No., & Part Description

Gate Latch Controls

REF	PART NO.	QTY	DESCRIPTION
1	3140066	2	Shaft-Gate, 10 Ft.
	3140065	2	Shaft-Gate, 11 Ft.
	3140063	2	Shaft-Gate, 12 Ft.
	3140064	2	Shaft-Gate, 13 Ft.
	3140426	2	Shaft-Gate, 14 Ft.
	3141081	2	Shaft-Gate, 15 Ft.
2	3140498	AR	Gate Asm-6 In., Hopper
3	3150120	AR	Bushing-Retainer
4	3140499	AR	Gate Asm-12 In., Hopper
5	3140562	AR	Linkage Asm-Gate, Front Hopper *(Includes Ref #'s 6-11)*
6	6100126	1	Ball Joint, 7/16-20, SR-1106
7	0121893	1	Screw-Hex, 0.25NC x 0.88, GR2, PD
8	9413946	1	Nut-Hex, Lock, 0.25NC, EA, PD
9	3140492	1	Clip-Spring, Adjustable
10	3140563	1	Linkage-Gate, Front Hopper
11	0103384	1	Pin-Cotter, 0.12 x 0.75, PD
12	3360269	AR	Spring-Bitumeter Whl. Tach
13	3141124	AR	Spacer-0.68 OD x 0.50 ID x 0.25 Thk
14	7215020	AR	Pivot & Bolt Set-Hpr, Chips *(Includes Ref #'s 15-18)*
15	3140574	1	Bolt-Pivot Assy Ref.# 3140325
16	6100028	AR	Washer-Wrought, 1.50 x 0.64 x 14 Ga.
17	9411027	1	Fitting-Lub, Stgt x 0.50 Typ C
18	3141113	1	Pivot Asm-Gate Handle, Finished
19	0120383	AR	Washer-Lock, 0.44, Spring, PD
20	0272123	AR	Nut-Hex, JAM, 0.44NF, PD
21	3140407	AR	Handle Asm-Hopper *(Includes Ref #'s 16-18, 22-25)*
22	3140194	1	Yoke-Gate Arm
23	3140324	1	Pin-Gate Latch
24	0455481	1	Pin-Spring, 0.19 x 1.00, HV, PN
25	3140323	1	Spring-Gate Latch
26	3140029	AR	Knob-Rubber
27	3100293	AR	Screw-UNBRAKO, Button 0.50NC x 2
28	3140372	AR	Latch Plate
29	3140303	AR	Spacer-Gate Lever
30	9411727	AR	Nut-Hex, Lock, 0.50NC, EA, PD
31	3140290	1	Bar-10 Ft., Top Gate
	3140291	1	Bar-11 Ft., Top Gate
	3140292	1	Bar-12 Ft., Top Gate
	3140293	1	Bar-13 Ft., Top Gate
	3140423	1	Bar-Top Gate, 14 Ft. Assy
32	3140294	1	Bar-10 Ft., Bottom Gate
	3140295	1	Bar-11 Ft., Bottom Gate
	3140296	1	Bar-12 Ft., Bottom Gate
	3140297	1	Bar-13 Ft., Bottom Gate
	3140424	1	Bar-Bottom Gate, 14 Ft. Asm
33	3140289	AR	Link-Gate Bar Assy
34	6300029	1	Link-Gate Bar
35	3140288	2	Bronze Bearing
36	3140298	AR	Bolt-Gate Link Shoulder
37	0120426	AR	Screw-Hex, 0.50NC x 1.25, GR2, PD

REF	PART NO.	QTY	DESCRIPTION

AR - AS REQUIRED

Hydraulic IndividualGate Control
(Optional)

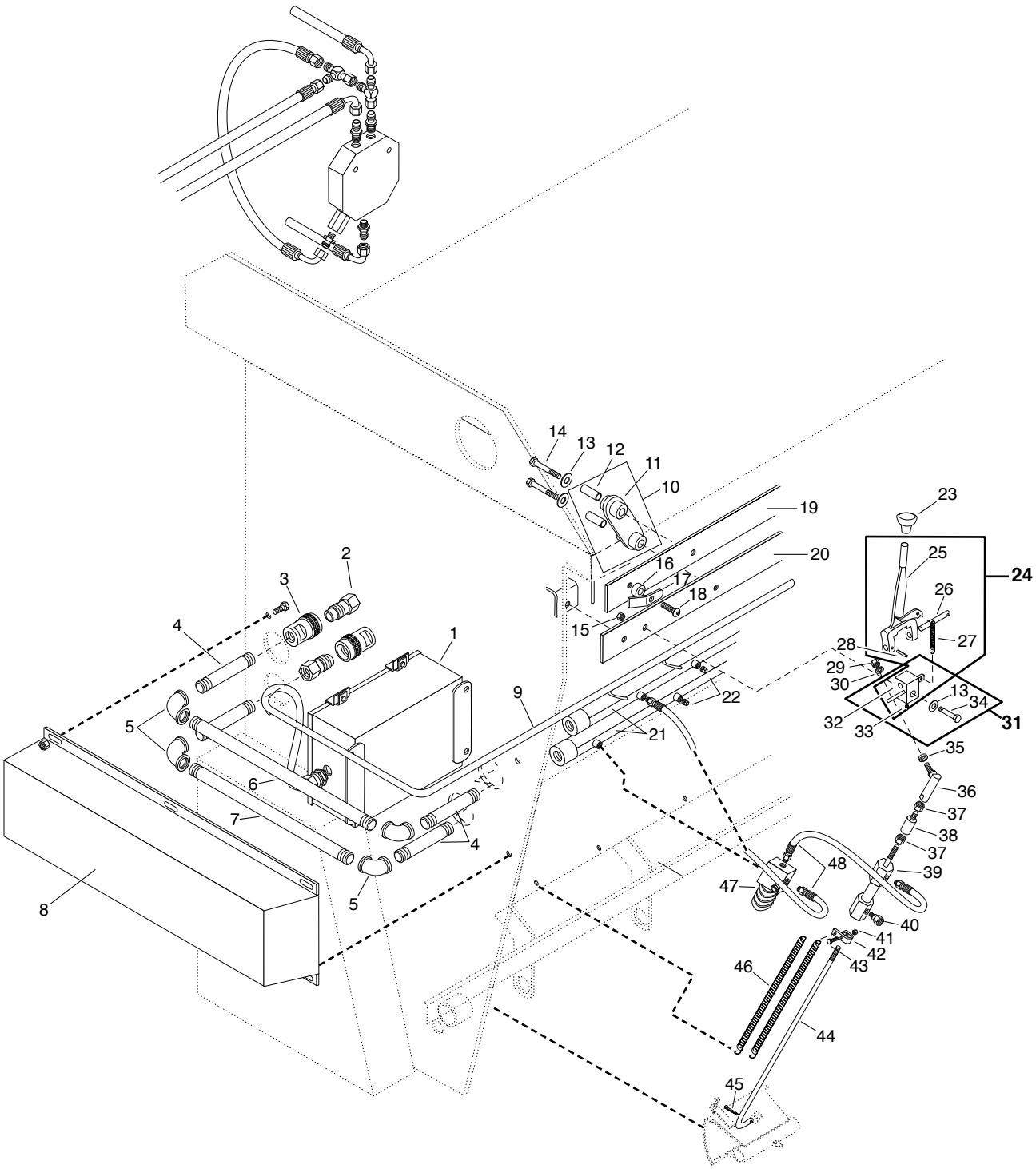

Specify Unit Serial No., Part No., & Part Description

Hydraulic IndividualGate Control
(Optional)

REF	PART NO.	QTY	DESCRIPTION
1	3160335	1	Junction Box-Indiv. Gate Cont.
2	6602296	2	Coupling-Hyd, Quick, Fem, 3/4, PIP
3	6602297	2	Coupling-Hyd, Quick, Male, 3/4, PI
4	0190724	4	Nipple-PP, Sch 40, 0.75 x 4.00
5	0119099	4	Elbow-Pipe, 90, 0.75NPT, PN
6	6200599	1	Pipe-Sch 40, 0.75 x 30.38, TBE
7	6200600	1	Pipe-Sch 40, 0.75 x 28.00, TBE
8	3140672	1	Cover-Hyd Lines, Indiv.Gate Cont.
9	3160336	1	Harness-Wiring, Indiv. Gate Cont.
10	3140289	AR	Link-Gate Bar Assy
11	6300029	1	Link-Gate Bar
12	3140288	2	Bronze Bearing
13	6100028	AR	Washer-Wrought, 1.50 x 0.64 x 14Ga.
14	3140298	AR	Bolt-Gate Link Shoulder
15	9411727	AR	Nut-Hex, Lock, 0.50NC, EA, PD
16	3140303	AR	Spacer-Gate Lever
17	3140372	AR	Latch Plate
18	3100293	AR	Screw-UNBRAKO, Button, 0.50NC x 2
19	3140290	1	Bar-10 Ft., Top Gate
	3140291	1	Bar-11 Ft., Top Gate
	3140292	1	Bar-12 Ft., Top Gate
	3140293	1	Bar-13 Ft., Top Gate
	3140423	1	Bar-Top Gate, 14 Ft. Assy
20	3140294	1	Bar-10 Ft., Botton Gate
	3140295	1	Bar-11 Ft., Botton Gate
	3140296	1	Bar-12 Ft., Botton Gate
	3140297	1	Bar-13 Ft., Botton Gate
	3140424	1	Bar-Bottom Gate, 14 Ft. Assy
21	3140668	2	Manifold Asm-Gate Cont.-10 Ft.
	3140669	2	Manifold Asm-Gate Cont.-11 Ft.
	3140670	2	Manifold Asm-Gate Cont.-12 Ft.
	3140671	2	Manifold Asm-Gate Cont.-13 Ft.
	3140660	2	Manifold Asm-Gate Control, 14 Ft.
22	0219190	AR	Plug-Pipe, SqHd, 0.25NPT, PD
23	3140029	AR	Knob-Rubber
24	3140407	AR	Handle Asm-Hopper *(Includes Ref #'s 25-28, 32, 33)*
25	3140194	1	Yoke-Gate Arm
26	3140324	1	Pin-Gate Latch
27	3140323	1	Spring, Gate Latch
28	0455481	1	Pin-Spring, 0.19 x 1.00, HV, PN
29	0272123	AR	Nut-Hex, JAM, 0.44NF, PD
30	0120383	AR	Washer-Lock, 0.44, Spring, PD
31	7215020	AR	Pivot & Bolt Set-Hop. Chips *(Includes Ref #'s 13, 32-34)*
32	3141113	1	Pivot Asm-Gate Handle, Finished
33	9411027	1	Fitting-Lub. Stgt x 0.50 TYP C
34	3140574	1	Bolt-Pivot Assy Ref# 3140325
35	3141124	AR	Spacer-0.68 OD x 0.50 ID x 0.25 Thk
36	6100126	AR	Ball Joint, 7/16-20, SR-1106
37	0272123	AR	Nut-Hex, JAM, 0.44NF
38	3141090	AR	Adapter-Gate Rod, Indiv. Cntl.
39	6601490	AR	Cylinder-Gate, Front Hopper
40	6601548	AR	Breather Vent-0.25 In.
41	9413946	AR	Nut-Hex, Lock, 0.25NC, EA, PD
42	3140492	AR	Clip-Spring, Adjustable
43	0121893	AR	Screw-Hex, 0.25NC x 0.88, GR2, PD
44	3140674	AR	Linkage-Gate, Front Hopper
45	0103384	AR	Pin-Cotter, 0.12 x 0.75, PD
46	3360269	AR	Spring-Bitumeter Whl. Tach
47	6601488	AR	Value-Solenoid, Hyd, 12VDC
48	6601489	AR	Hose Asm-04 x 20, 04MPX-04MPX

AR - AS REQUIRED

Front Drive Motor Installation

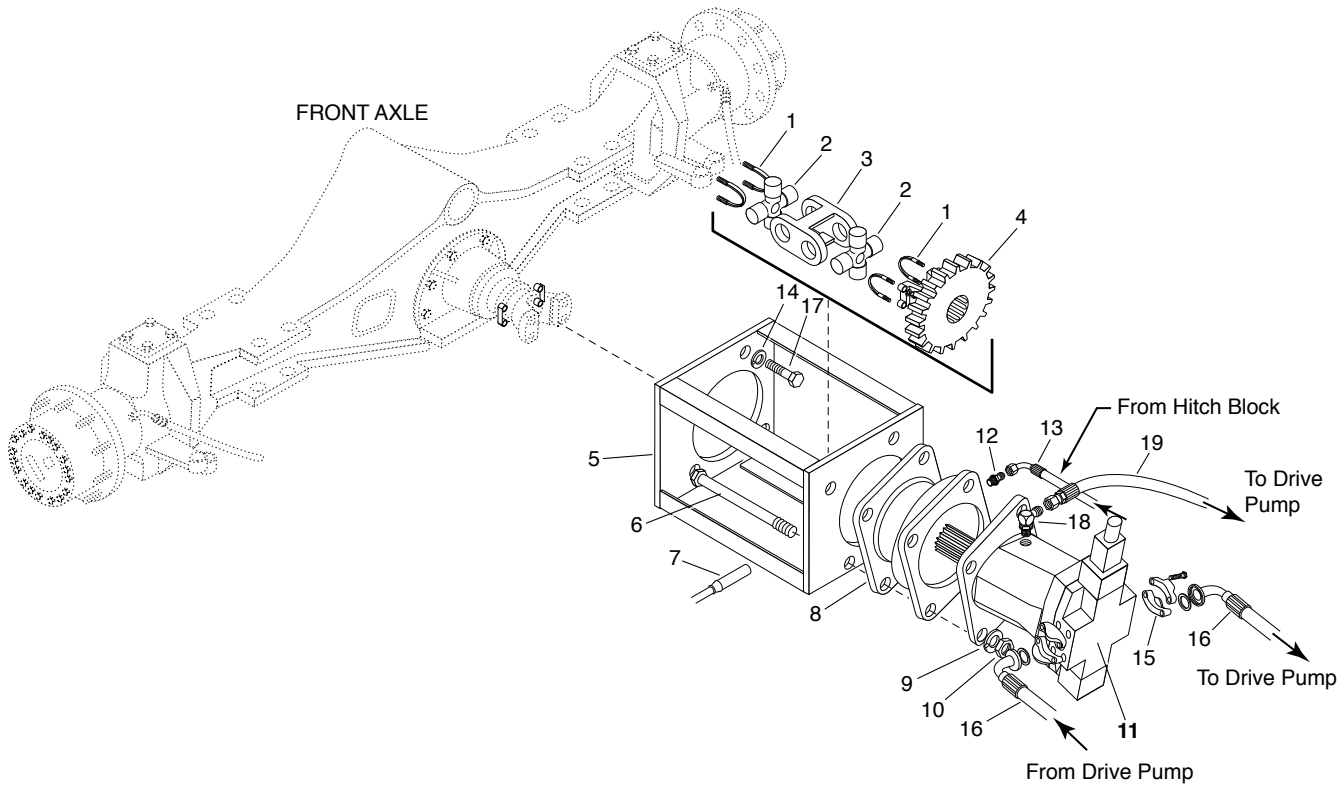

REF	PART NO.	QTY	DESCRIPTION
1	3111288	2	U Bolt Assy, Spicer 1480
2	3110073	2	Journal & Brg. Kit-SP5-188X PO
3	3111286	1	Yoke-Center Assy, SPICER 1480
4	3101959	1	End Yoke-Speed Weldment
5	3111305	1	Mount-Hydraulic Motor
6	6100297	4	Screw-Hex, 0.38 x 6.00, GR8, PD
7	3160687	1	Speed Sensor Cable Asm
8	3111298	1	Brake, Parking-Sprg App Hyd Rel
9	0131046	4	Washer-Lock, 0.75, Spring, PD
10	0220086	4	Nut-Hex, 0.75NC, PD
11	3181075	1	Motor-Hyd, 107CC W/0 Speed Sens
12	0410200	1	Adapter-Hyd, ST, 04MB-04MJ
13	3181209	1	Hose Asm-04 x 108, 04FJX90-04FJX90
14	0120898	4	Washer-Lock, 0.56, Spring, PD
15	6602624	2	Split Flange Kit-1” Code 62
16	6602621	2	Hose Asm-1” x 50” Lg., 6000 PSI
17	0454778	4	Screw-Hex, 0.56NC x 2.00, GR8, PD
18	9410979	1	Elbow-Hyd, 90, 12MB-12MJ
19	6601210	1	Hose Asm-12 x 26, 12FJX-12FJX

Hydraulic Tank Plumbing

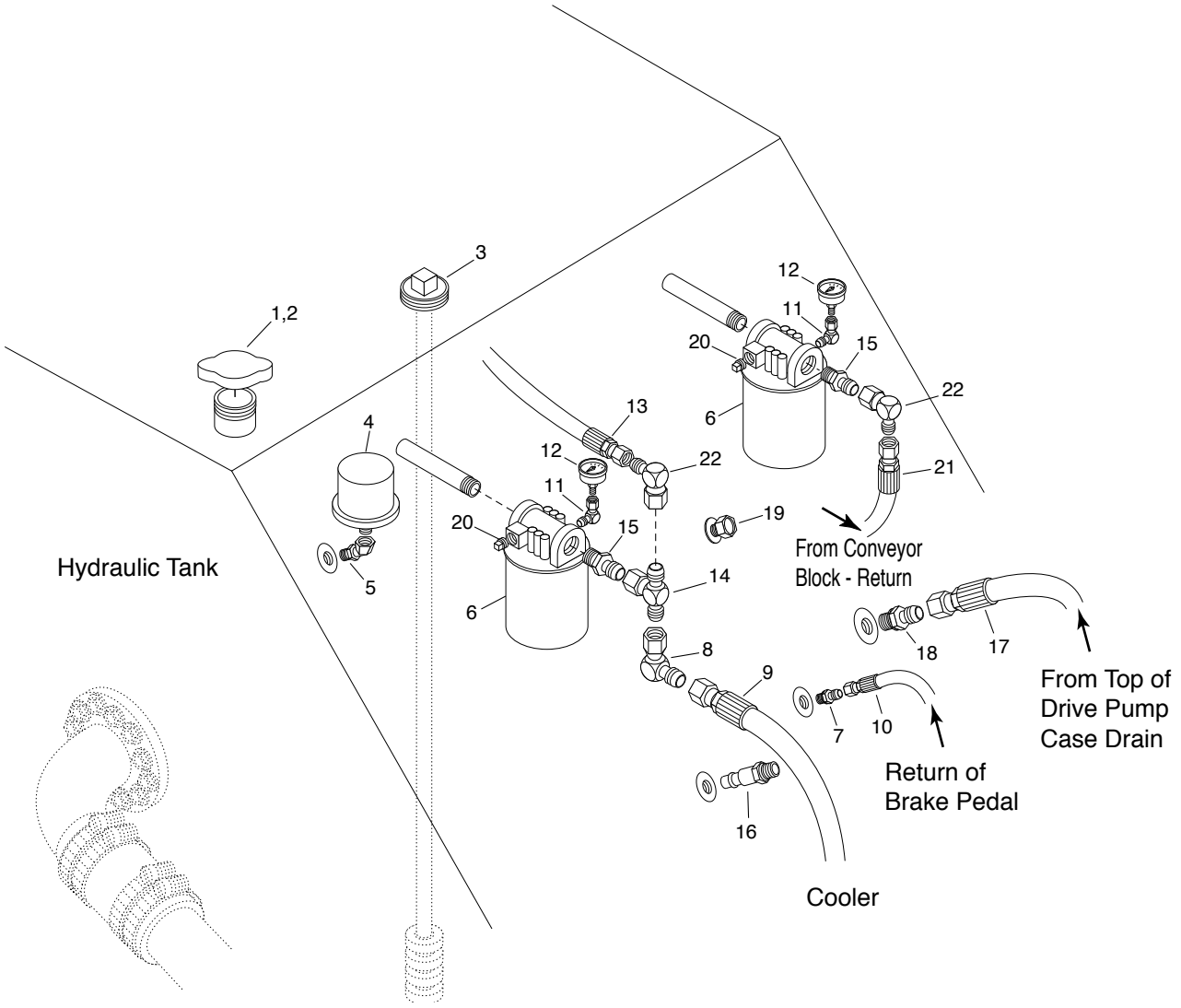

REF	PART NO.	QTY	DESCRIPTION
1	3330026	1	Cap-Fill, Blank
2	6000233	1	Gasket-2.18 Filler Cap, Leather
3	6602685	1	Magnet-Hyd Tank
4	6601125	1	Breather-Hyd Rsv. 0.75NPT, 5PSI
	7430221	1	Element
5	4470915	2	Elbow-Hyd, 45, 12FPX-12MP
6	6602214	2	Filter-Hyd Vacuum, 10 Micron ABS
	7420244	1	Element
7	9410200	1	Adapter-Hyd, ST, 04MB-04MJ
8	9410285	1	Elbow-Hyd, 90, 16FJX-16MJ
9	3181232	1	Hose Asm-16 x 27, 16FJX-16FJX
10	3181247	1	Hose Asm-04 x 218, 04FJX90-04FJX
11	6601039	2	Elbow-Hyd, 90, 02FPX-02MP
12	7420183	2	Indicator-Condition, Hyd Filter
13	6602762	1	Hose End-90, 20BARB-20MP

REF	PART NO.	QTY	DESCRIPTION
14	6601894	1	Tee-Hyd, 16MJ-16MJ-16FJX
15	6602756	2	Adapter-Hyd, ST, 20MP-16MJ
16	6700400	1	Sender-Temp 12V, 0.50NPT
17	3181196	1	Hose Asm-16 x 144, 16FJX-16FJX
18	9410207	1	Adapter-Hyd, ST, 16MB-16MJ
19	6600224	1	Plug-Oil, Eyesite, MCMAST CARR
20	0219187	1	Plug-Pipe, SqHd, 0.12NPT, PN
21	3181206	1	Hose Asm-12 x 43, 12FJX90-12FJX90
22	6602765	2	Elbow-Hyd, 90, 16FJX-12MJ

Hydraulic Pumps and Rear Motor - 4WD

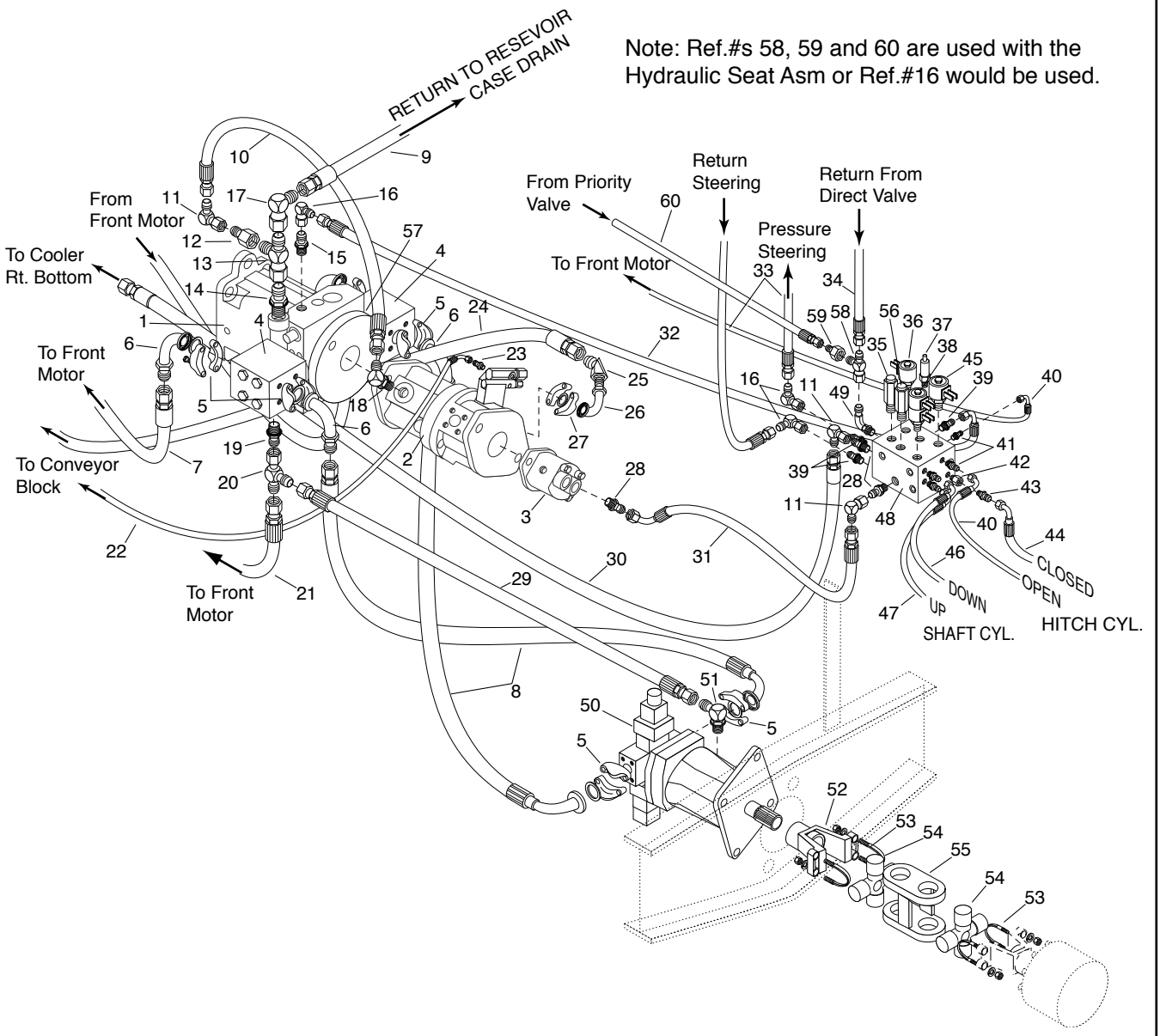

Note: Ref.#s 58, 59 and 60 are used with the Hydraulic Seat Asm or Ref.#16 would be used.

Hydraulic Pumps and Rear Motor - 4WD

REF	PART NO.	QTY	DESCRIPTION
1	3181072	1	Pump-125CC Var Disp., 5800 PSI
2	6602601	1	Pump-Var Disp., 4.52 CID, AUX A MT
3	6602610	1	Pump-1.65 Cir Fixed, SAE A 2 Bolt
4	6602649	2	Tee-Hyd, 20FL-16FL-16FL, 6K PSI
5	6602624	4	Split Flange Kit-1" Code 62
6	6602622	4	Elbow-90, 16 Flange-16MJ, 6000 PSI
7	6602621	2	Hose Assy-1" x 50" Lg., 6000 PSI
8	6602620	2	Hose Assy-1" x 33" Lg., 6000 PSI
9	3181196	1	Hose Asm-16 x 144, 16FJX-16FJX
10	6601213	1	Hose Asm-12 x 18, 12FJX-12FJX
11	9410283	3	Elbow-Hyd, 90, 12FJX-12MJ
12	6601889	1	Adapter-Hyd, ST, 16FJX-12MJ
13	9410337	2	Tee-Hyd, 16MJ-16FJX-16MJ
14	9410207	1	Adapter-Hyd, ST, 16MB-16MJ
15	6600903	1	Adapter-Hyd, ST, 08MJ-10MB
16	9410281	3	Elbow-Hyd, 90, 08FJX-08MJ
17	9410285	1	Elbow-Hyd, 90, 16FJX-16MJ
18	6601811	1	Elbow-Hyd, 90, 10MB-12MJ
19	6601418	1	Adapter-Hyd, ST, 12MJ-16MB
20	9410335	1	Tee-Hyd, 12MJ-12FJX-12MJ
21	6601210	1	Hose Asm-12 x 26, 12FJX-12FJX90
22	3181199	1	Hose Asm-04 x 132, 04FJX90-04FJX
23	6601381	1	Adapter-Hyd, ST, 04MP-04MJ
24	3181124	1	Hose Asm-16 x 134, 16FJX-16FJX
25	6602021	1	Elbow-Hyd, 45, 16MJ-16FJX
26	6601045	1	Elbow-Hyd, 90, 16FL-16MJ
27	6600236	1	Flange Kit-1.00, 4 Bolt, Split
28	9410205	3	Adapter-Hyd, ST, 12MB-12MJ
29	3181122	1	Hose Asm-12 x 32, 12FJX-12FJX
30	3181195	1	Hose Asm-16 x 128, 16FJX-12FJX
31	3181234	1	Hose Asm-12 x 38, 12FJX-12FJX90
32	3181210	1	Hose Asm-08 x 39, 08FJX90-08FJX
33	3181239	2	Hose Asm-08 x 145, 08FJX-08FJX90
34	3181242	1	Hose Asm-08 x 162, 08FJX-08FJX
			Used for Electric Seat
	3181378	1	Hose Asm-08 x 18, 08FJX-08FJX
			Used for Hydraulic Seat
35	7430272	1	Vlv-Cartridge, Relief 250 PSI
	7430273	1	Seal Kit
36	7430274	1	Vlv-Cartridge, Sol. 2 Way/3 Pos
	7430275	1	Coil-12V, Weatherpack Size 8
	7430276	1	Seal Kit
37	7430270	1	Vlv-Cartridge, P Red 115 PSI
	7430263	1	Seal Kit
38	7430277	1	Vlv-Cartridge, Sol 3 Way/4 Pos
	7430275	1	Coil-12V, Weatherpack Size 8
	7430278	1	Seal Kit
39	9410203	3	Adapter-Hyd, ST, 08MB-08MJ
40	3181209	2	Hose Asm-04 x 120, 04FJX90-04FJX90
41	9410200	4	Adapter-Hyd, ST, 04MB-04MJ
42	6601008	1	Adapter-Hyd, ST, 04FP-04MJ
43	Q6602192	1	Adapter-Hyd, ST, 08MJ-04MP
44	3181243	1	Hose Asm-08 x 112, 08FJX-08FJX90
45	7430279	1	Vlv-Cartridge, Sol 2 Way/4 Pos
	7430280	1	Coil-12V, Weatherpack Size 12
	7430281	1	Seal Kit
46	3181245	1	Hose Asm-04 x 47, 04FJX-04FJX90
47	3181246	1	Hose Asm-04 x 38, 04FJX-04FJX90
48	3181076	1	Manifold-Hitch/Pwr Steer/Brake
	7430283	1	Orifice Plug, SAE 03, .042
	7430282	1	Orifice Plug, SAE 03, .035
	7430284	1	Plug-Port, 06MB
	7430285	1	Seal-Port Plug
49	9410977	1	Elbow-Hyd, 90, 08MB-08MJ
50	3181075	1	Motor-Hyd, 107CC W/O Speed Sens
51	9410979	1	Elbow-Hyd, 90, 12MB-12MJ
52	3111287	1	Yoke-End, 13 Spline SPICER
53	3111288	2	U Bolt Assy, SPICER 1480
54	3110073	2	Journal & Brg. Kit-SP5-188X PO
55	3111286	1	Yoke-Center Assy, SPICER 1480
56	7430271	1	Vlv-Cartridge, Seq. 2000 PSI
	7430263	1	Seal Kit
57	6602650	3	Spacer-Hyd, 20FL-20FL, 6K PSI
58	9410333	1	Tee-Hyd, 08MJ-08FJX-08MJ
59	6602154	1	Adapter-Hyd, ST, 08FJX-04MJ
60	3181382	1	Hose Asm-04 x 18, 04FJX-04FJX

HydraulicPumps - 2WD

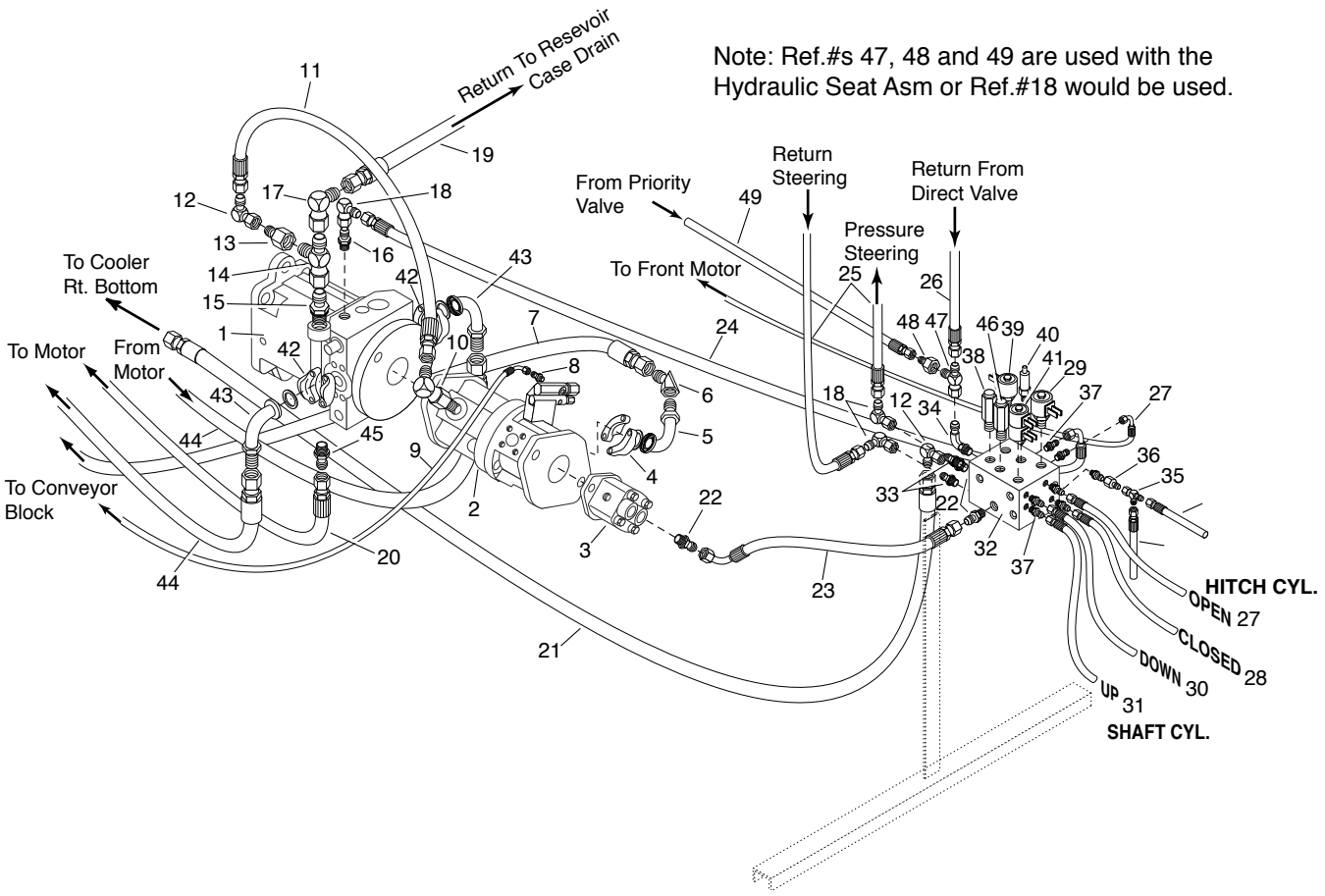

HydraulicPumps - 2WD

REF	PART NO.	QTY	DESCRIPTION
1	3181072	1	Pump-125CC Var Disp. 5800 PSI
2	6602601	1	Pump-Var Disp. 4.52 CID, AUX A MT
3	6602610	1	Pump-1.65 Cir Fixed, SAE A 2 Bolt
4	6600236	1	Flange-Kit, 1.00, 4 Bolt, Split
5	6601045	1	Elbow-Hyd, 90, 16FL-16MJ
6	6602021	1	Elbow-hyd, 45, 16MJ-16FJX
7	3181124	1	Hose Asm-16 x 134, 16FJX-16FJX
8	6601381	1	Adapter-Hyd, ST, 04MP-04MJ
9	3181198	1	Hose Asm-04 x 138, 04FJX-04FJX90
10	6601811	1	Elbow-Hyd, 90, 10MB-12MJ
11	6601213	1	Hose Asm-12 x 18, 12FJX-12FJX
12	9410283	3	Elbow-Hyd, 90, 12FJX-12MJ
13	6601889	1	Adapter-Hyd, ST, 16FJX-12MJ
14	9410337	1	Tee-Hyd, 16MJ-16FJX-16MJ
15	9410207	1	Adapter-Hyd, ST, 16MB-16MJ
16	6600903	1	Adapter-Hyd, ST, 08MJ-10MB
17	9410285	1	Elbow-Hyd, 90, 16FJX-16MJ
18	9410281	3	Elbow-Hyd, 90, 08FJX-08MJ
19	3181196	1	Hose Asm-16 x 144, 16FJX-16FJX
20	6601210	1	Hose Asm-12 x 26, 12FJX-12FJX90
21	3181195	1	Hose Asm-16 x 128, 16FJX-12FJX
22	9410205	3	Adapter-Hyd, ST, 12MB-12MJ
23	3181234	1	Hose Asm-12 x 38, 12FJX-12FJX90
24	3181210	1	Hose Asm-08 x 39, 08FJX90-08FJX
25	3181239	2	Hose Asm-08 x 145, 08FJX-08FJX90
26	3181242	1	Hose Asm-08 x 162, 08FJX-08FJX
		1	*Used for Electric Seat*
	3181378	1	Hose Asm-08 x 18, 08FJX-08FJX
			Used for Hydraulic Seat
27	3181209	2	Hose Asm-04 x 120, 04FJX90-04FJX90
28	3181243	1	Hose Asm-08 x 112, 08FJX-08FJX90
29	7430279	1	Vlv-Cartridge, Sol. 2 Way/4 Pos
	7430280	1	Coil-12V, Weatherpack Size 12
	7430281	1	Seal Kit
30	3181245	1	Hose Asm-04 x 47, 04FJX-04FJX90
31	3181246	1	Hose Asm-04 x 38, 04FJX-04FJX90
32	3181076	1	Manifold Hitch/Pwr Steer/Brake
	7430283	1	Orifice Plub, SAE 03, .042
	7430282	1	Orifice Plug, SAE 03, .035
	7430284	1	Plug-Port, 06MB
	7430285	1	Seal-Port Plug
33	9410203	3	Adapter-Hyd, ST, 08MB-08MJ
34	9410977	1	Elbow-Hyd, 90, 08MB-08MJ
35	Q6602192	1	Adapter-Hyd, ST, 08MJ-04MP
36	6601008	1	Adapter-Hyd, ST, 04FP-04MJ
37	9410200	4	Adapter-Hyd, ST, 04MB-04MJ
38	7430272	1	Vlv-Cartridge, Relief 250 PSI
	7430273	1	Seal Kit
39	7430274	1	Vlv-Cartridge, Sol. 2 Way/3 Pos
	7430275	1	Coil-12V, Weatherpack Size 8
	7430276	1	Seal Kit
40	7430270	1	Vlv-Cartridge, P Red 115 PSI
	7430263	1	Seal Kit
41	7430277	1	Vlv-Cartridge, Sol. 3 Way/4 Pos
	7430275	1	Coil12V, Weatherpack Size 8
	7430278	1	Seal Kit
42	6602624	2	Split Flange Kit-1” Code 62
43	6602622	2	Elbow-90, 16 Flange-16MJ 6000 PSI
44	6602621	2	Hose Assy-1” x 50” Lg. 6000 PSI
45	6601418	1	Adapter-Hyd, ST, 12MJ-16MB
46	7430271	1	Vlv-Cartridge, Seq. 2000 PSI
	7430263	1	Seal Kit
47	9410333	1	Tee-Hyd, 08MJ-08FJX-08MJ
48	6602154	1	Adapter-Hyd, ST, 08FJX-04MJ
49	3181382	1	Hose Asm-04 X 18, 04FJX-04FJX

Hitch Assembly & Controls

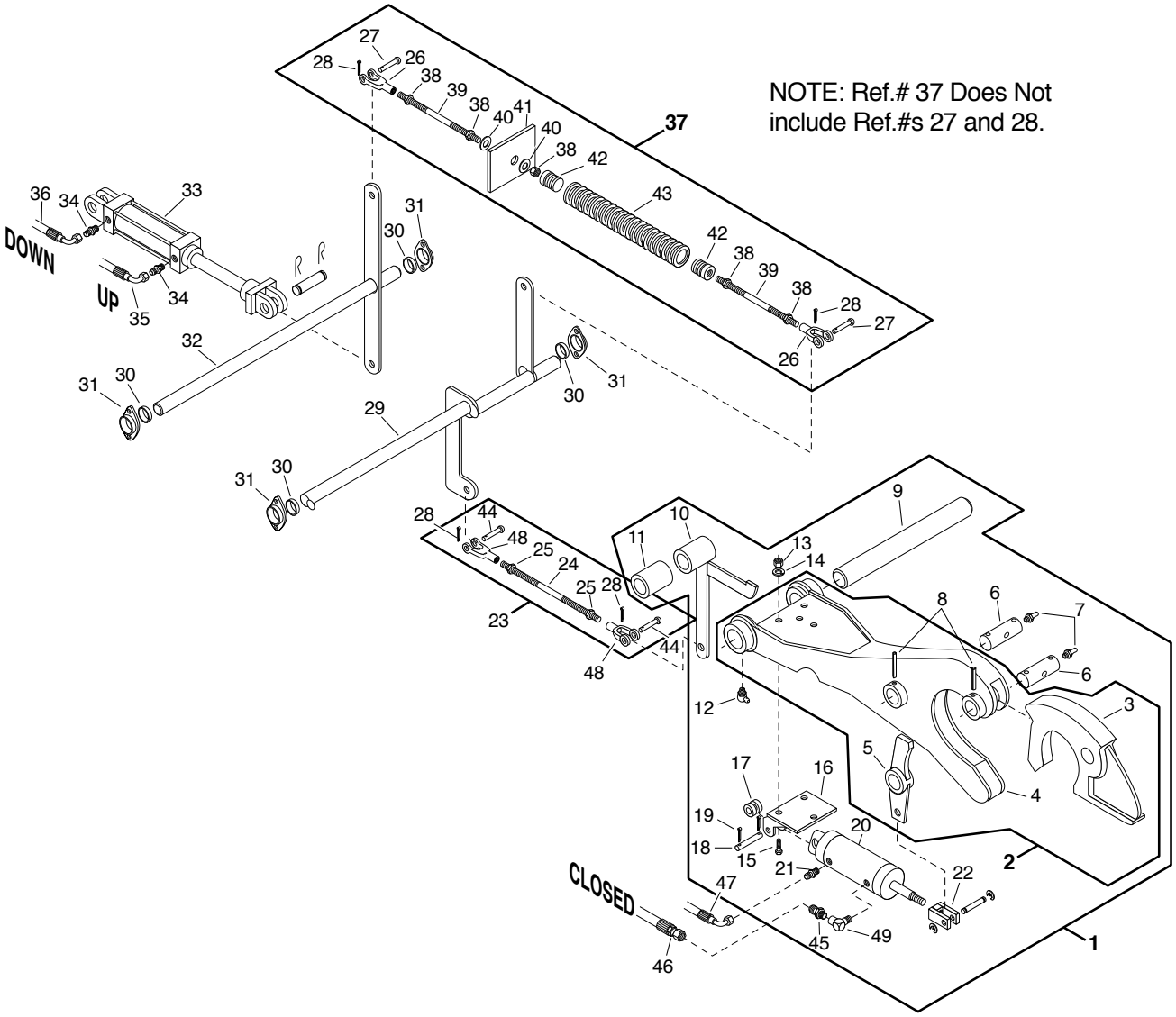

Hitch Assembly & Controls

REF	PART NO.	QTY	DESCRIPTION
1	3130405	1	Hitch Asm-Rear Chips, Hydraulic *(Includes Assembly 2, & Ref #'s 6, 7, 9-22, 45, 49)*
2	3130359	1	Hitch Sub Asm *(Includes Ref #'s 3-5, 8)*
3	3130364	1	Latch-Locking, Chips Hitch
4	3130363	1	Body-Chips Hitch
5	3130419	1	Dog Latch
6	3130007	2	Shaft-Latch
7	9411027	2	Fitting-Lub, Stgt x 1/2 Typ C
8	0457008	2	Pin-Spring, 0.19 x 1.50, HV, PN
9	3130004	1	Shaft-Hitch Pivot
10	3130011	1	Arm-Lifting Asm
11	3130067	1	Hub-Lever Dog
12	0109462	2	Elbow-Lube, 90, 0.13PTF x 0.84, PN
13	0120377	3	Nut-Hex, 0.38NC, PD
14	0120382	3	Washer-Lock, 0.38, Spring, PD
15	0122181	3	Screw-Hex, 0.38NC x 2.00, GR2, PD
16	3130417	1	Mtg. Asm-Rear Cyl, Hitch Release
17	3130420	2	Tube-Spacer, Hitch Asm
18	3130418	1	Pin-RR Cyl. Mtg. Hitch Release
19	0103375	2	Pin-Cotter, 0.09 x 1.25, PD
20	6602578	1	Cyl, Hydr, 1.50 Bore x 2.00 Stroke
21	6601381	1	Adapter-Hydr, ST, 04MP-04MJ
22	6602579	1	Rod Clevis, Hyd Cyl.
23	3130444	1	Linkage Asm-Rear Hitch *(Includes Ref #'s 24, 25, 28, 44, 48)*
	3130447	1	Linkage Asm-Short (Shipped Loose)
24	3130446	1	Arm Asm-Long
	3130448	1	Arm Asm-Short
25	0124589	2	Nut-Hex, 0.62NC, PD
26	3140117	2	Clevis-0.50 Spck 2708-6A Cleve
27	6000401	2	Rivet-RdHd, 0.50 x 1.62, Drilled, PD
28	0103386	4	Pin-Cotter, 0.12 x 1.25, PD
29	3130439	1	Lever-Actuator, Hitch, Hydro CS
30	3100061	4	Collar-Retainer, SC-100, 1INIDPO
31	6420106	4	Flange-Brg, Ball, 2 Blt., 1.00STMP
32	3150811	1	Shaft Asm-Hitch, Release, Front
33	6601781	1	Cylinder-Hyd, 2.00 x 6.00
	7420230	1	Kit-Repair, Cyl, 2"
34	6602751	2	Adapter-Hyd, ST, 06M-08MJ
35	3181245	1	Hose Asm, 04 x 47, 04FJX90-04FJX90
36	3181246	1	Hose Asm, 04 x 38, 04FJX90-04FJX90
37	3130441	1	Linkage-Hook, Car, Hydro CS *(Includes Ref #'s 26-28, 38-43)*
38	0120238	5	Nut-Hex, JAM, 0.50NC
39	3130440	2	Rod-Conn., Hydro C.S.
40	0120390	2	Washer-Flat, 0.50A, W, PD
41	3150665	1	Bumper-Hitch Linkage
42	3130059	2	Screw-Thd, Spring
43	3100078	1	Sprg-Est. 1.5 ID x 13 Lg. No Loops
44	6000403	2	Rivet-RdHd, 0.50 x 2.00, Drilled
45	Q6602192	1	Adapter-Hyd, ST, 08MJ-04MP
46	3181243	1	Hose Asm, 08 x 112, 08FJX-08FJX90
47	3181209	1	Hose Asm, 04 x 108, 04FJX90-04FJX90
48	6000367	2	Clevis-0.62NC W/0.53 Hole
49	0454109	1	Elbow-Auto, 90, 04FP-04MP, PD

Conveyor Motors and Hydraulic Block Plumbing

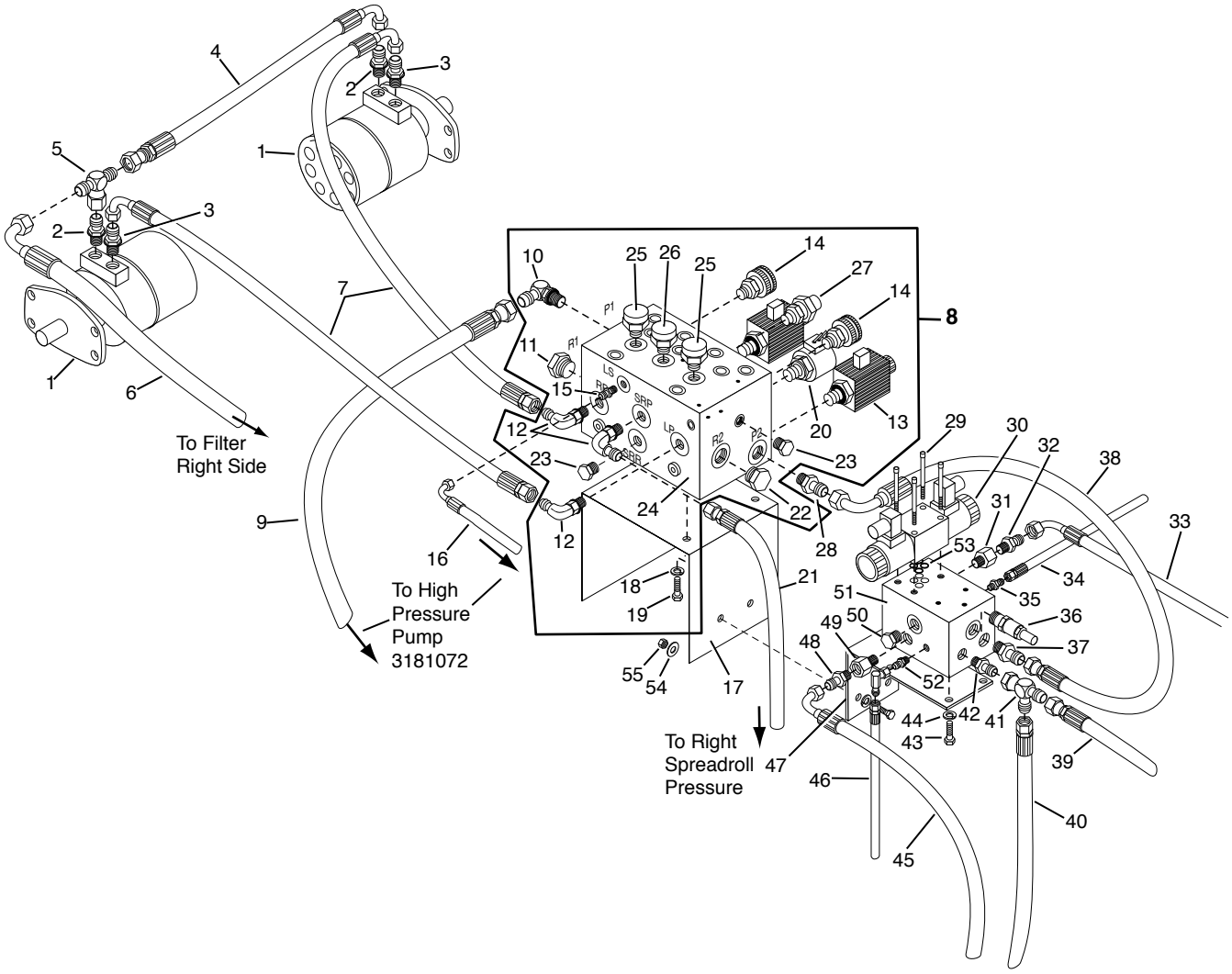

Conveyor Motors and Hydraulic Block Plumbing

REF	PART NO.	QTY	DESCRIPTION
1	6602376	2	Motor-Hyd, 14.8 Cir
2	6600910	2	Adapter-Hyd, ST, 10MB-12MJ
3	6600903	2	Adapter-Hyd, ST, 08MJ-10MB
4	3181204	1	Hose Asm-12 x 19, 12FJX-12FJX90
5	9410309	1	Tee-Hyd, 12MJ-12MJ-12FJX
6	3181206	1	Hose Asm-12 x 43, 12FJX-12FJX90
7	3181202	1	Hose Asm-08 x 24, 08FJX-08FJX90
8	3181226	1	Manifold Assy-Conv/Spreadroll
			(Includes Ref #'s 10-15, 18-20, 22-27)
9	3181196	1	Hose Asm-16 x 144, 16FJX-16FJX
10	6601568	1	Elbow-Hyd, 90, 16MB-16MJ
11	6602737	1	Plug-Hyd, 20MB
12	9410977	3	Elbow-Hyd, 90, 08MB-08MJ
13	6602728	2	Valve-Hyd, 2 Pos, 2 Way, Soft, 12V
14	7430280	2	Valve, Cartridge, Needle W/Knob
	7430281	2	Orifice Plug, SAE 03, Blank
	7430282	2	Orifice Plug, SAE 03, .140"
15	9410200	1	Adapter-Hyd, ST, 04MB-04MJ
16	3181198	1	Hose Asm-04 x 144, 04FJX90-04FJX90
17	3120762	1	Manifold Plate
18	0120384	4	Washer-Lock, 0.50, Spring, PD
19	0120426	4	Screw-Hex, 0.50NC x 1.25, GR2, PD
20	7430276	1	Valve-Cartridge, Sol, 2Way/2Pos
	7430277	1	Seal Kit
	7430270	1	Coil
21	3181201	1	Hose Asm-08 x 66, 08FJX-08FJX
22	9410361	2	Plug-Hyd, 12MB, PD
23	9410359	1	Plug-Hyd, 08MB, PD
24	3181077	1	Manifold-Conveyor / Spreadroll
	7430286	1	Valve-Check, Cartridge (Not Shown)
	7430287	1	Seal Kit for 7430286
			(Also includes Ref.#20)
25	7430283	1	Valve-Press. Comp., Conv/Aug
	7430285	1	Seal Kit
26	7430284	1	Valve-Press. Comp., Spreadroll
	7430285	1	Seal Kit
27	7430278	1	Valve-Cartridge, Needle, 0-15 GPM
	7430279	1	Seal Kit
28	*		
29	*		
30	*		
31	*		
32	*		
33	*		
34	*		
35	*		
36	*		
37	*		
38	*		
39	*		
40	*		
41	*		
42	*		
43	*		
44	*		
45	*		
46	*		
47	*		
48	*		
49	*		
50	*		
51	*		
52	*		
53	*		
54	*		
55	*		

* Specify Serial Number

Conveyor Arrangement

NOTE: Ref 40 (Coupler-6445077) includes Ref 39

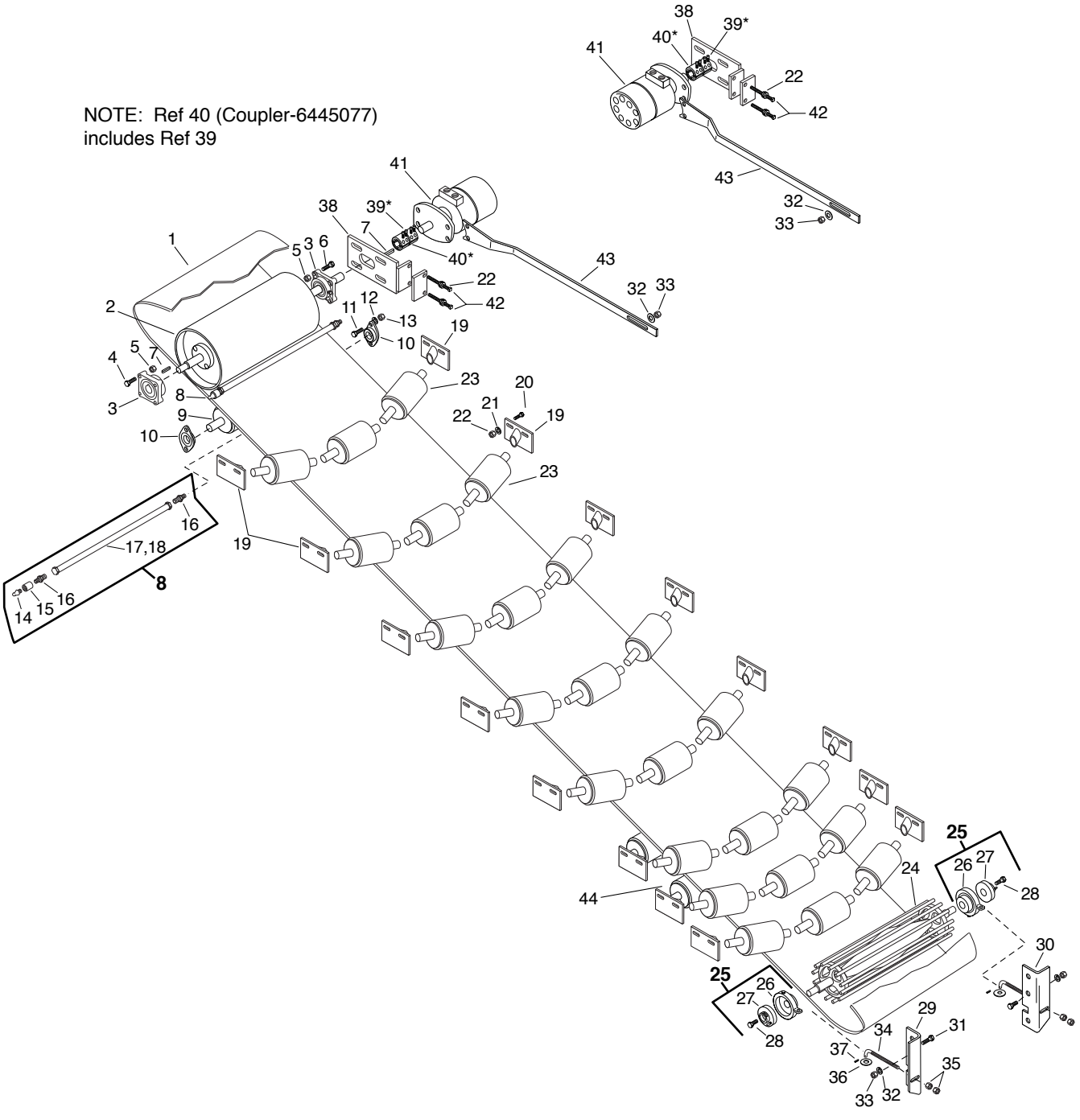

Specify Unit Serial No., Part No., & Part Description

Conveyor Arrangement

REF	PART NO.	QTY	DESCRIPTION
1	3130395	1	Belt-Conv, 24", W/Fastener
	7050128	1	Hinge Pin-24" Belt Splice
	7050127	1	Splice-24", Complete Kit
2	3130422	2	Head Pulley Assy-Conv, No Lag
3	3140094	4	Flange Brg-Ball, 4 Bolt, 1.562
4	0186646	8	Screw-Hex, 0.50NC x 1.75, GR8, PN
5	9411727	16	Nut-Hex, Lock, 0.50NC, EA, PD
6	0180183	8	Screw-Hex, 0.50NC x 2.25, GR5, PD
7	6000224	4	Key-0.31 x 0.31CR x 1.00
8	3130423	4	Tube Assy-Grease, 24" Conveyor *(Includes Ref #'s 14-18)*
9	3130398	2	Roller Asm-Front Idler
10	6420086	4	Flange Brg-Ball, 2 Blt., 1.00
11	6100277	8	Screw-RdSqNk Blt., 0.31NC x 1, GR5,PD
12	0120214	8	Washer-Lock, 0.31, Spring, PD
13	0120376	8	Nut-Hex, 0.31NC, PD
14	9411010	1	Fitting-Lub, Stgt, 0.12 x 0.69
15	0105408	1	Coupling-Pipe, 0.12NPT, PN
16	0114796	2	Connector Asm-Ball Sleeve, 0.31
17	6309069	2.65'	Tube-Copper, 0.31 x 0.03, Generic
18	6000108	1.44'	Loom-Fibre, 0.31 In.
19	3130003	32	Bracket-Idler
20	0120233	64	Screw-Hex, 0.38NC x 1.00, GR2, PD
21	0120382	64	Washer-Lock, 0.38, Spring, PD
22	0120377	72	Nut-Hex, 0.38NC, PD
23	6435478	48	Roller-Trough, 24" Conveyor
24	3130402	2	Pulley Asm-Tail, Conveyor CS
25	3130095	4	Bearing & Hsg Asm-Tail Pulley *(Includes Ref #'s 26, 27)*
26	3100096	1	Housing-RR Pull Brg
27	3130055	1	Brg-Cartridge, SC-22, 1.38 Shf.
28	6000550	2	Screw-Hex, 0.25-14 x 0.75, Tek 3, PD
29	3100049	2	Bracket-Align, LH
30	3100050	2	Bracket-Align, RH
31	3100174	12	Screw-Rear Pulley
32	0120384	12	Washer-Lock, 0.50, Spring, PD
33	0120378	12	Nut-Hex, 0.50NC, PD
34	3130083	4	Screw-Tail Pulley Adj.
35	0124589	8	Nut-Hex, 0.62NC, PD
36	0130999	2	Washer-Flat, 0.62A(0.69 x 1.75)PD
37	0457008	4	Pin-Spring, 0.19 x 1.50, HV, PN
38	3180945	2	Plate-Bearing, Adjustment
39*		4	Cap Screws (included W/Coupler #40)
40*	6445077	2	Coupler
41	6602376	2	Motor-Hyd, 14.8 Cir
42	0191966	4	Screw-SqHd, 0.38NC x 3.00, Oval, PD
43	3130424	2	Torque Arm-Conv Motor Mount
44	6435479	4	Roller-Return, 24" Conveyor

REF	PART NO.	QTY	DESCRIPTION

Brake and Steering Hoses
4WD

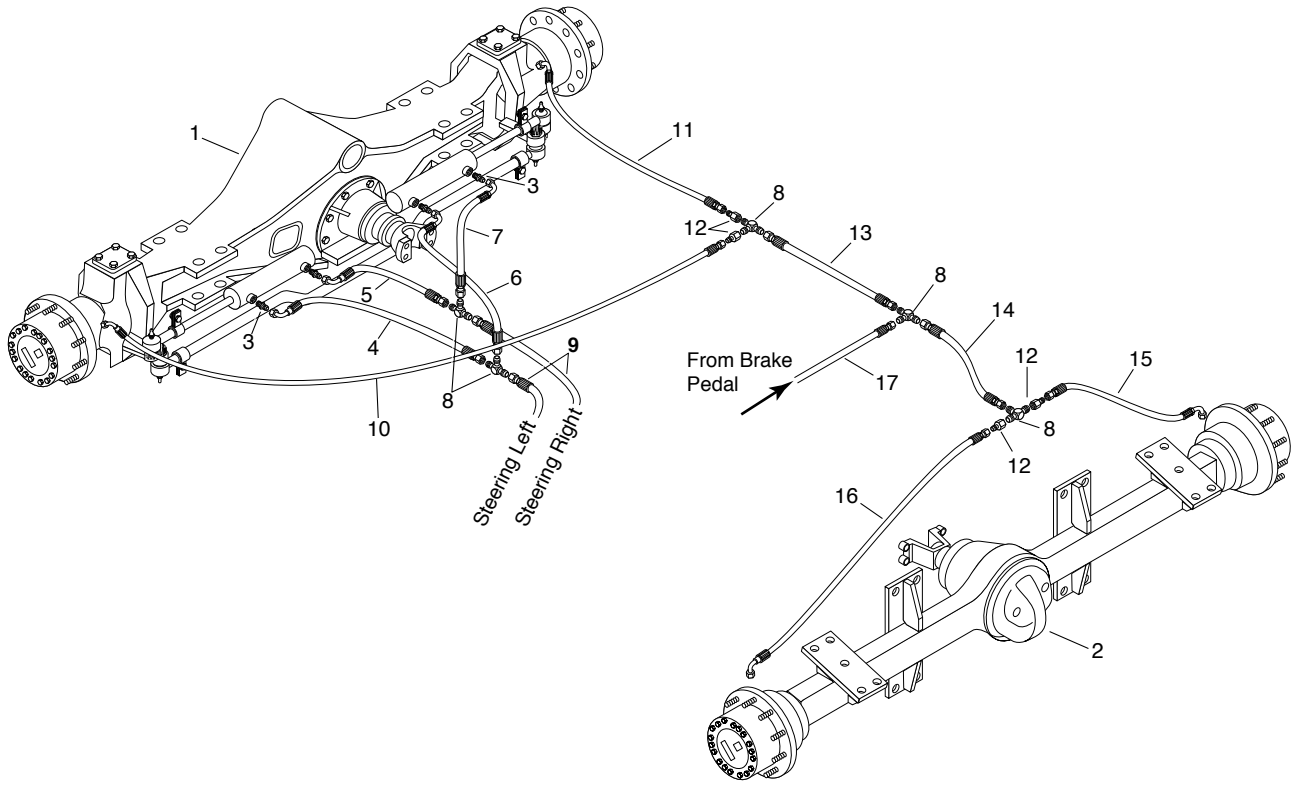

REF	PART NO.	QTY	DESCRIPTION
1	3111284	1	Axle-Front, Drive, 81.25” Track
2	3111285	1	Axle-Rear Drive, 80” Track
3	9402709	4	Adapter-Hyd, ST, 08MJ-08MP
4	3181101	1	Hose Asm-08 x 26, 08FJX-08FJX90
5	3181208	1	Hose Asm-08 x 20, 08FJX-08FJX
6	3181212	1	Hose Asm-08 x 36, 08FJX90-08FJX
7	3181211	1	Hose Asm-08 x 43, 08FJX90-08FJX
8	6602078	5	Tee-Hyd, 08MJ-08MJ-08MJ
9	3181134	2	Hose Asm-08 x 198, 08FJX-08FJX90
10	3181218	1	Hose Asm-04 x 59, 04FJX-04FJX90
11	3181153	1	Hose Asm-04 x 33, 04FJX-04FJX90
12	6602154	4	Adapter-Hyd, ST, 08FJX-04MJ
13	3181213	1	Hose Asm-08 x 70, 08FJX-08FJX
14	3181214	1	Hose Asm-08 x 28, 08FJX-08FJX
15	3181215	1	Hose Asm-04 x 34, 04FJX-04FJX90
16	3181216	1	Hose Asm-04 x 57, 04FJX-04FJX90
17	3181241	1	Hose Asm-08 x 152, 08FJX-08FJX90

Brake and Steering Hoses
2WD

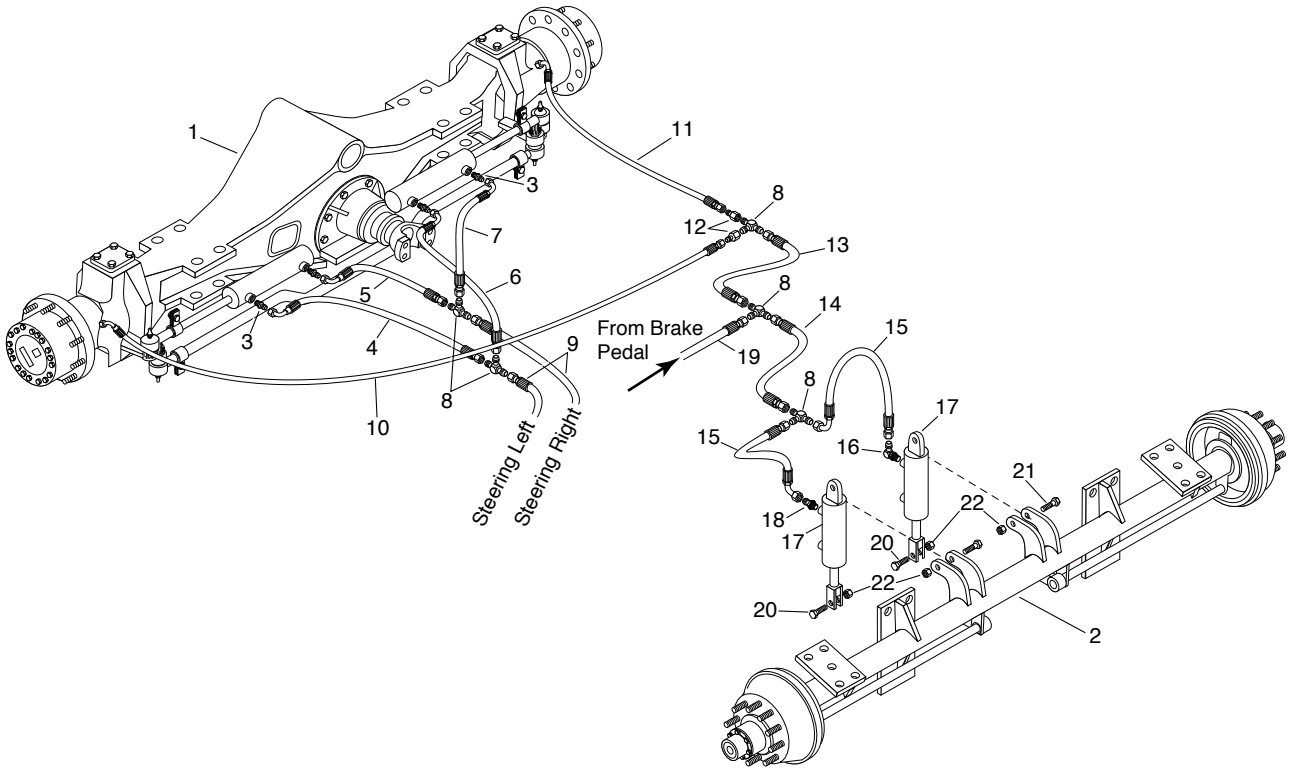

REF	PART NO.	QTY	DESCRIPTION
1	3111284	1	Axle-Front, Drive, 81.25” Track
2	3111310	1	Axle-25K, 97” Track, 22.5” Hubs
3	9402709	4	Adapter-Hyd, ST, 08MJ-08MP
4	3181101	1	Hose Asm-08 x 26, 08FJX-08FJX90
5	3181208	1	Hose Asm-08 x 20, 08FJX-08FJX
6	3181212	1	Hose Asm-08 x 36, 08FJX90-08FJX
7	3181211	1	Hose Asm-08 x 43, 08FJX90-08FJX
8	6602078	5	Tee-Hyd, 08MJ-08MJ-08MJ
9	3181134	2	Hose Asm-08 x 198, 08FJX-08FJX90
10	3181218	1	Hose Asm-04 x 59, 04FJX-04FJX90
11	3181153	1	Hose Asm-04 x 33, 04FJX-04FJX90
12	6602154	4	Adapter-Hyd, ST, 08FJX-04MJ
13	3181213	1	Hose Asm-08 x 70, 08FJX-08FJX
14	3181214	1	Hose Asm-08 x 28, 08FJX-08FJX
15	3181202	2	Hose Asm-08 x 24, 08FJX-08FJX90
16	9410977	1	Elbow-Hyd, 90, 06MB-08MJ
17	6602680	2	Cylinder-Hyd, 3” Bore x 2.5 Stroke
18	6601143	1	Adapter-Hyd, ST, 06MB-08MJ
19	3181241	1	Hose Asm-08 x 152, 08FJX-08FJX90
20	0122307	2	Screw-Hex, 0.44NC x 2.00, GR2, PD
21	0122333	2	Screw-Hex, 0.44NC x 3.00, GR2, PD
22	9413947	4	Nut-Hex, Lock, 0.44NC, PD

Radiator / Cooler / Motor Mounts and Axle Connections

NOTE: Starting with Unit K5724, Ref.#s 49 and 50 will be used.

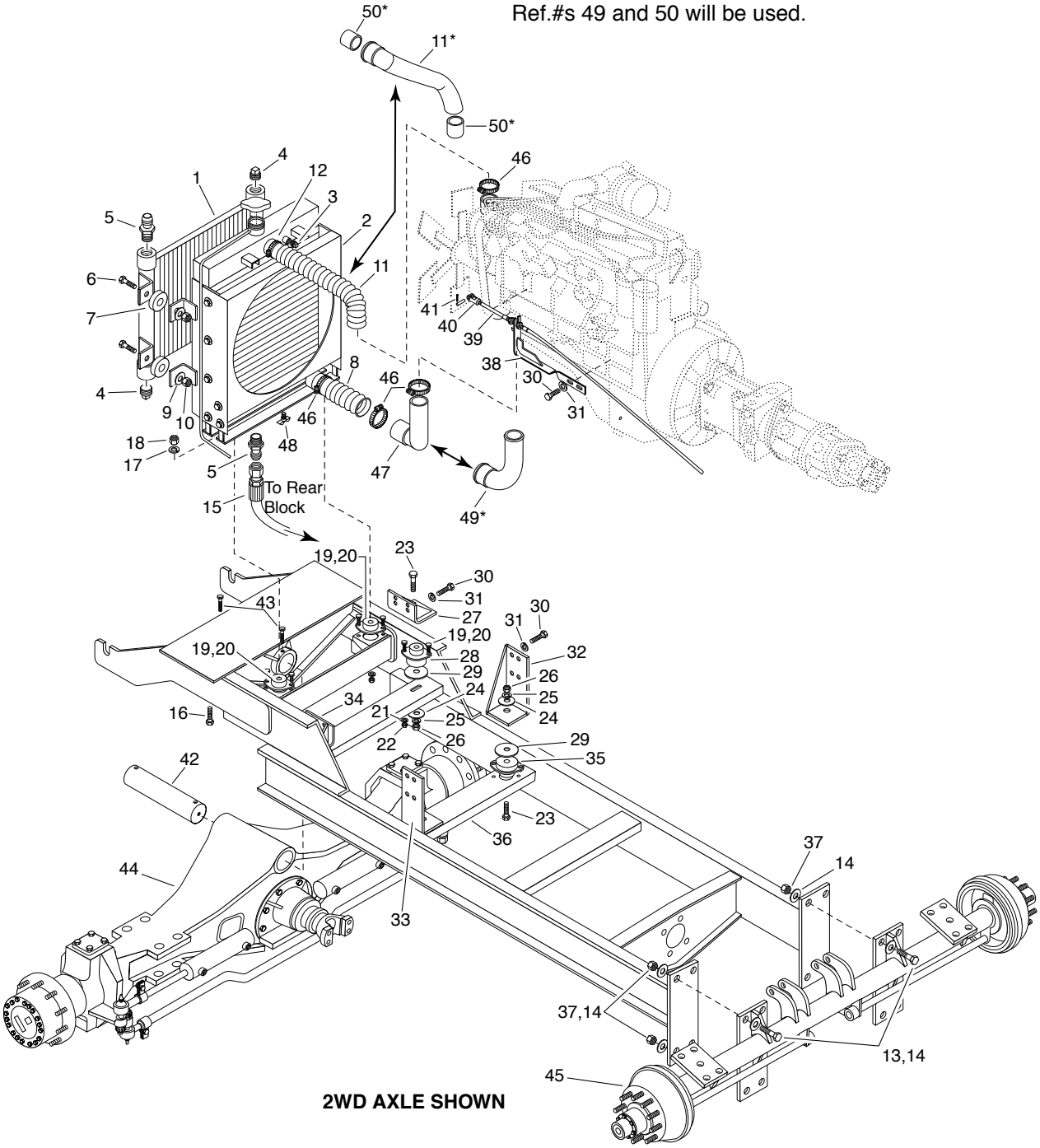

2WD AXLE SHOWN

ENGINE

Radiator / Cooler / Motor Mounts and Axle Connections

REF	PART NO.	QTY	DESCRIPTION
1	6601184	1	Cooler-Hydraulic Oil
2	6400361	1	Radiator-6 Row, 8 Fin/Inch
	7050990	1	Cap-Radiator
3	0219189	1	Plug-Pipe, SqHd, 0.25NPT, PN
4	0219303	2	Plug-Pipe, SqHd, 1.00NPT, PN
5	9402713	2	Adapter-Hyd, ST, 16MJ-16MP
6	0120918	4	Screw-Hex, 0.38 x 1.50, GR2, PD
7	6000455	4	Bushing-0.31 x 0.50 ALT IND 1530
8	6400281	1	Hose Radiator, 2.5 x 2.5 x 14" Lg.
9	0120388	4	Washer-Flat, 0.38A(0.44 x 1.00), PD
10	0274993	4	Nut-Hex, Lock, 0.38NC, EA, PD
11	3111332	1	Hose-Radiator, 2.0 x 2.5 x 22" Lg.
12	6600906	2	Clamp-Hose, Worm Dr., 1.81 x 2.75
13	6100267	8	Screw-Hex, 0.75NC x 3.00, GR8, PN
14	0131017	16	Washer-Flat, 0.75A(0.81 x 1.47), PD
15	3181233	1	Hose Asm-16 x 143, 16FJX-16FJX
16	0122333	2	Screw-Hex, 0.44 x 3.00NPT, PD
17	0120383	5	Washer-Lock, 0.44, Spring, PD
18	0271501	5	Nut-Hex, 0.44NC, PD
19	6000999	2	Mount-Cushion, Front, PERKINS
20	0120233	12	Nut-Hex, 0.38NC x 1.00, GR2, PD
21	0120382	12	Washer-Lock, 0.38, Spring, PD
22	0120377	12	Nut-Hex, 0.38NC, PD
23	0428715	4	Screw-Hex, 0.62 x 4.00NPT, PD
24	9422850	8	Washer-Flat, 0.62A(0.65 x 1.31)HN
25	0121574	8	Washer-Lock, 0.62, Spring, PD
26	0124589	8	Nut-Hex, 0.62NC, PD
27	3111192	1	Mount Asm-RT Front, CUMMINS B
	3111195	1	Mount Asm-RT Front, CUMMINS C
28	6000916	2	Mount-Cushion, Front Eng.
29	3101613	4	Shim-Radiator Mounting Chips
30	6001081	18	Bolt-Metric, M12-1.75 x 4.00
31	6001082	18	Washer-Lock, Metric, Chips
32	3111215	1	Mount Asm-RT Rear, CUMMINS B
	3111201	1	Mount Asm-RT Rear, CUMMINS C
33	3111217	1	Mount Asm-LT Rear, CUMMINS B
	3111200	1	Mount Asm-LT Rear, CUMMINS C
34	3111190	1	Mount Asm-LT, Front, CUMMINS B
	3111197	1	Mount Asm-LT, Front, CUMMINS C
35	6001049	2	Mount-Cushion, Rear Eng.
36	3110993	1	Channel-Rear Eng. Mt. Chips
37	9411400	1	Nut-Hex, Lock, 0.75NC, GR, PD
38	3101666	1	Throttle Brkt. Asm
39	6601157	1	Cable-Control, Throttle
40	6000953	1	Clevis-Adj., 0.25 Pin, 10-32UNF
41	0103374	2	Pin-Cotter, .094 x 1.00, PD
42	3101886	1	Shaft-Frt Axle/Pyramid, Chipspr
43	6100086	2	Screw-SqHd, 0.50NC x 1.00, H/DG, LK
44	3111284	1	Axle-Front, Drive, 81.25" Track
45	3111285	1	Axle-Rear Drive, 80" Track (4WD)
	3111310	1	Axle-25K, 97" Track, 22.5" Hubs (2WD)
46	6000088	3	Clamp-Hose, 2.50-3.00, QS100
	6001445	2	Clamp-T-Bolt, 2.16" to 2.47" (6B) (6C) at Radiator
47	3111174	1	Tube Asm-Lower, Rad, Cum 6CT
48	6600162	1	Cock-Drain, 0.25 In Spanco Brs.
49*	3111362	1	Elbow 2"-2 1/4", Radiator (Starting with K5724 and Up)
50*	6309329	2	Hose Rad. 1.75 x 48
	6309330	2	Hose Rad. 2.00 x 48

Air Intake Assemblies

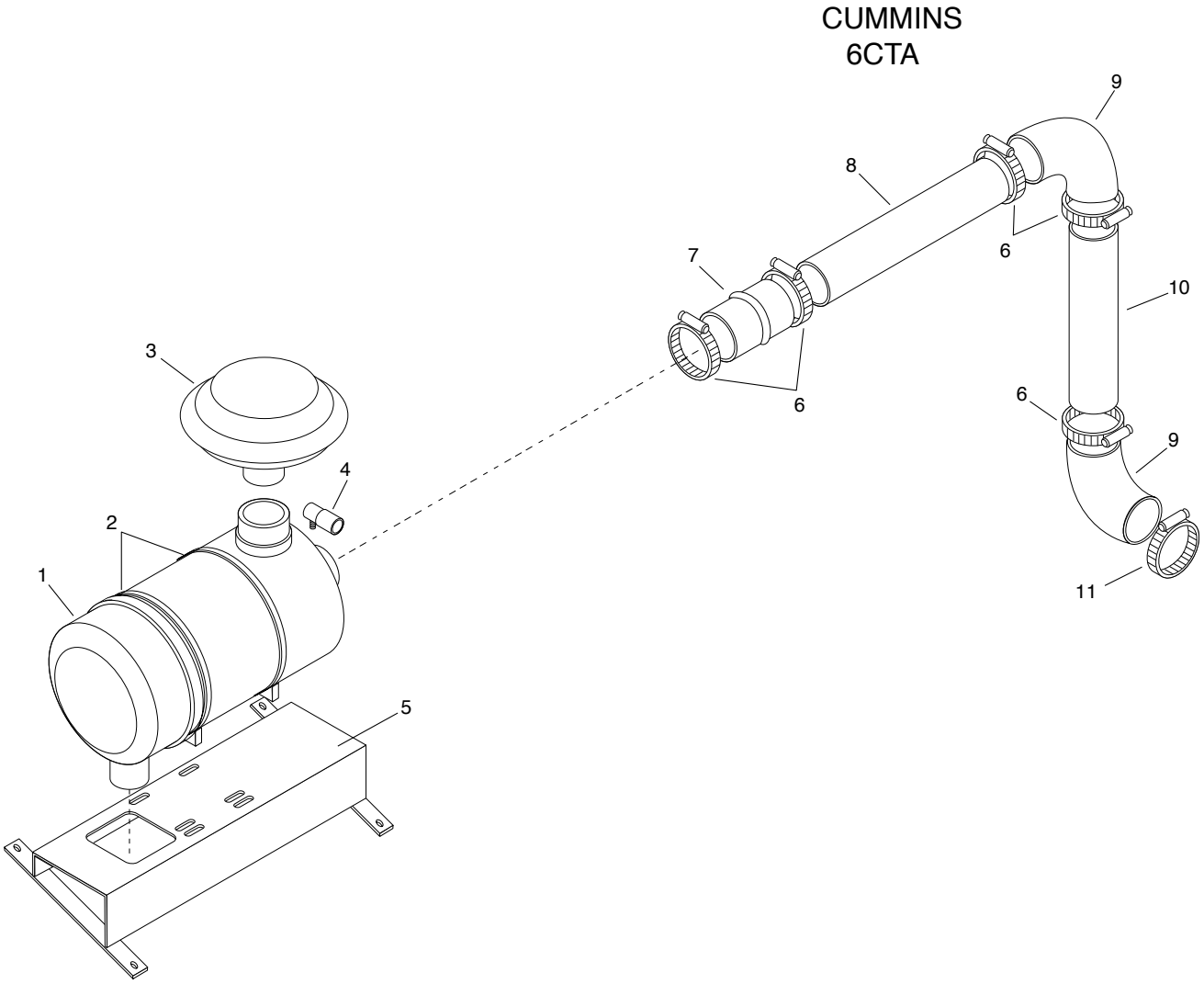

REF	PART NO.	QTY	DESCRIPTION
1	6400152	1	Filter-Air Intake, 12 In.
	7360010	1	Element-Air Filter, 12 In.
2	6400150	2	Bands-Mounting, 12 In. Filter
3	6400151	1	Hood-Filter Inlet, 4.50 In. OD
4	6400139	1	Indicator-Rst., 25 In. H20 DSL ONLY
5	3110752	1	Asm-Air Cleaner Mtg. Bracket
6	6400264	5	Clamp-Hose, 4.625 In., Worm Drive
7	6400149	1	Hose-Hump, ST, 4 x 4
8	K5573AC	1	Tube-Air Intake
9	6400143	2	Elbow-Rubber, 90 Deg., 4.00 ID
10	K5573AB	1	Tube-Air Intake
11	6400142	1	Clamp-Hose, Air Intake, 3.5-4.00 ID

REF	PART NO.	QTY	DESCRIPTION

Exhaust Assembly

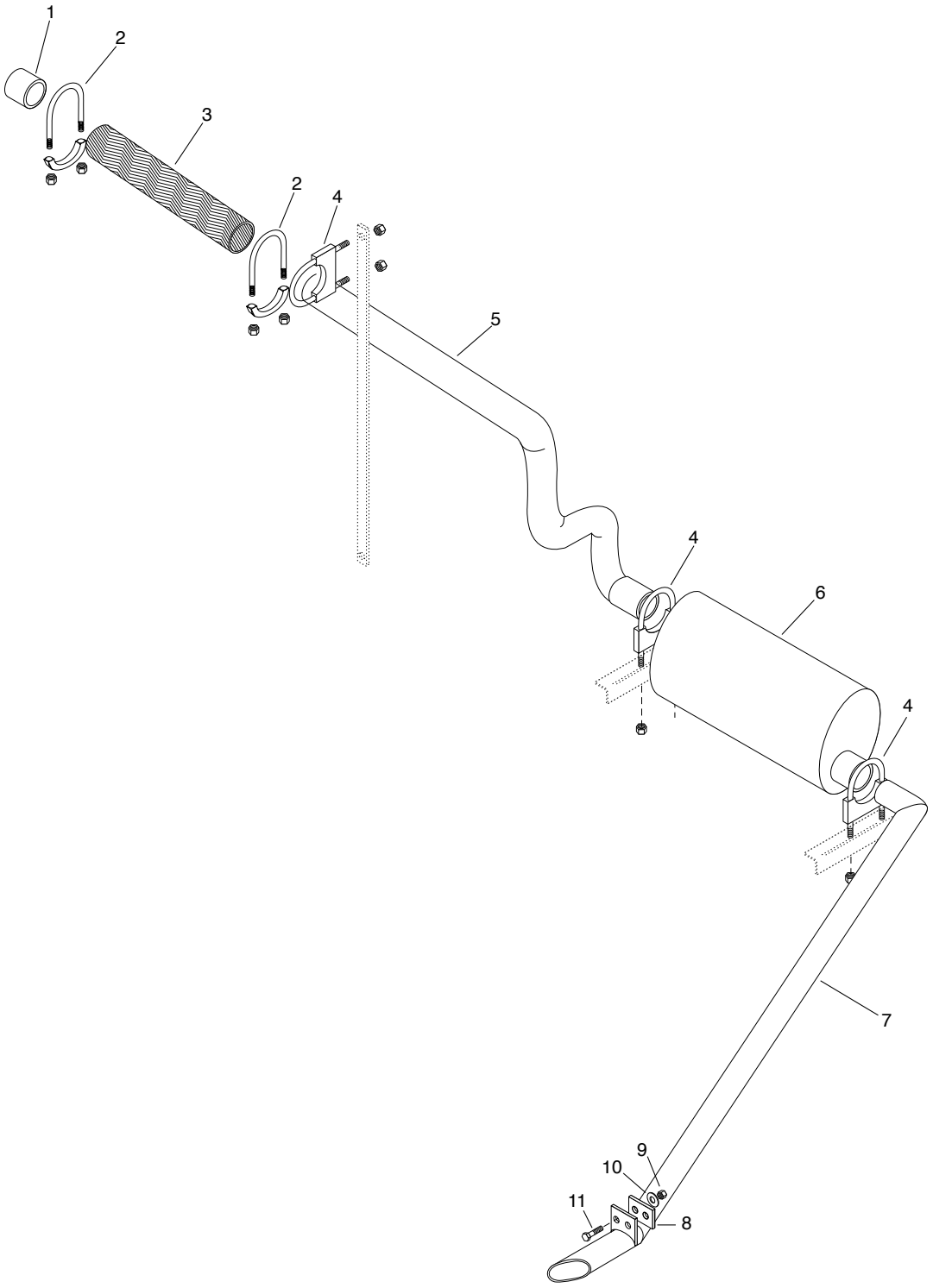

REF	PART NO.	QTY	DESCRIPTION
1	3101568	1	Tube-Exhaust, 3.5 OD x 4” Lg. C.S.
2	6000937	2	Clamp-Tube, Exh, 3.5 In. ID, TBG
3	3101940	1	Tubing-Exh, Flex, SS, 3.5 OD x 16”
4	6000938	3	Clamp-Tube Exhaust 4 In. ID, TBG
5	3101935	1	Discharge Exh Weldment 3.5 OD
6	6400299	1	Muffler-4” IN/OUT
7	3101938	1	Discharge Weldment, 4” OD
8	3101069	1	Absorber-Vibration
9	0127993	2	Nut-Hex, Lock, 0.38NC, EA, PD
10	0274517	2	Washer-Flat, 0.375, B, PD
11	0122145	2	Screw-Hex, 0.38NC x 1.25, GR2, PD

Suction Line Installation

3181288

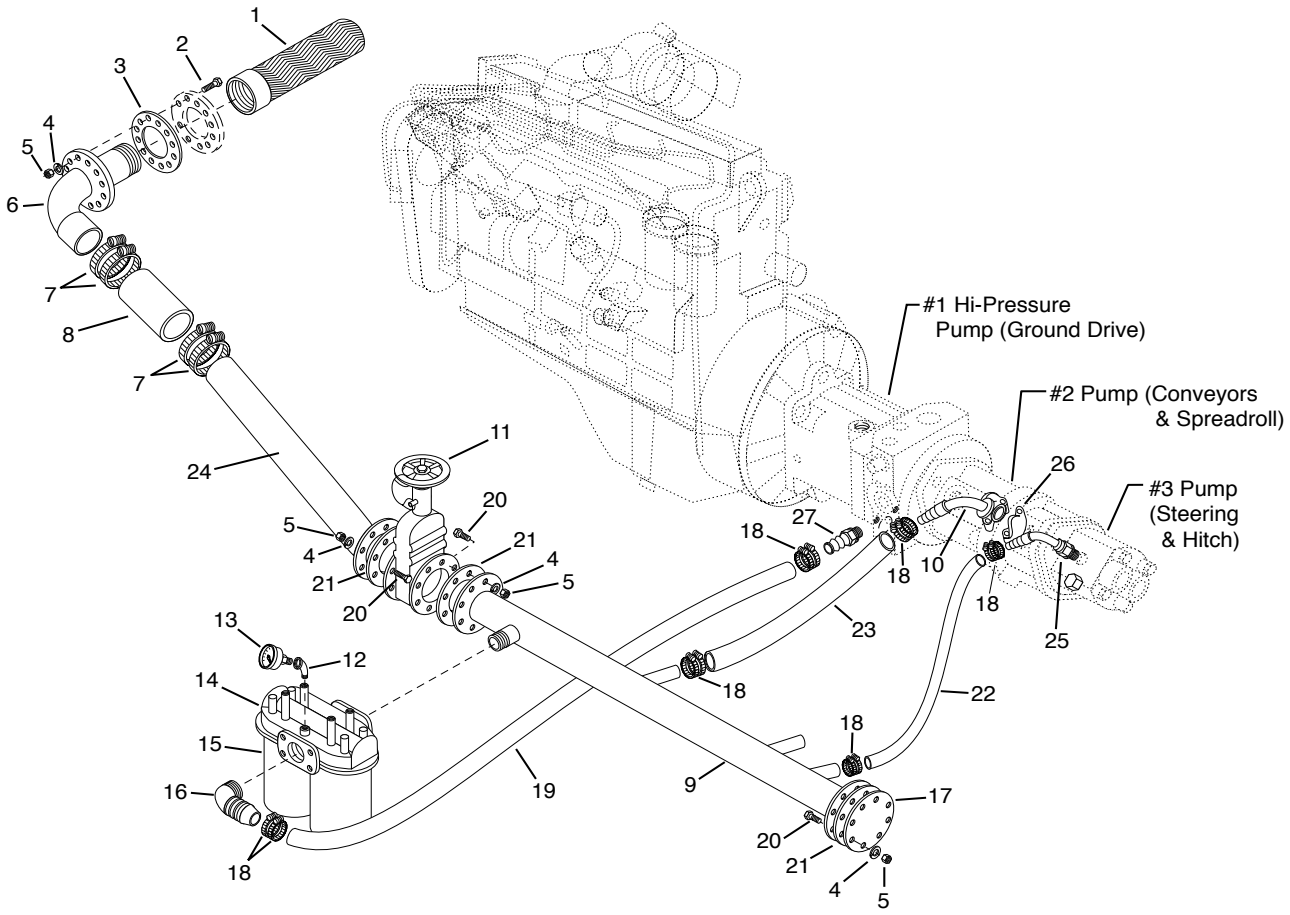

REF	PART NO.	QTY	DESCRIPTION
1	6602617	1	Strainer-Suction 100 Mesh, 116 GPM
2	0120918	12	Screw-Hex, 0.38NC x 1.50, GR2, PD
3	6602604	1	Gasket-5” Flange, AV#15961-CB
4	0120382	36	Washer-Lock, 0.38, Spring, PD
5	0120377	36	Nut-Hex, 0.38NC, PD
6	3181088	1	Outlet-Filter, Hyd Rsvr Weldment
7	6400264	4	Clamp-Hose, 4.625 In. Worm Dr.
8	3181096	1	Sleeve, Suction Pipe
9	3181094	1	Suction Pipe Weldment
10	6602625	1	Hose End-2”, 90 Deg. O-Ring Flange
11	3181343	1	Gate Valve/Saftey Asm
12	0106649	1	Elbow-Pipe, 45, ST, 0.12NPT, PN
13	7420042	1	Indicator-Filter, GRESEN #1588
14	6602618	1	Filter-Single Head Dual Element
15	6602619	2	Element-Hydraulic Filter, 3MIC
16	6602764	1	Hose End-90, 24BARB-24MP, LP
17	6200468	1	Flange-Blind, 3”, 20520 Allegh.
18	6600906	12	Clamp-Hose, Worm Dr., 1.81 x 2.75
19	3181095	1	Hose-Suct. Charge Pump, 1.50 x 33
20	0120233	24	Screw-Hex, 0.38NC x 1.00, GR2, PD
21	6601064	3	Gasket-3 Flange AV#10232-B, C+B
22	3181098	1	Hose Suction, Rear Pump, 1” x 24”
23	3181097	1	Hose Suction, Pump, 2” ID x 24” Lg.
24	3181228	1	Front Suction Pipe Wldmt, Upper
25	6602735	1	Hose End, 45 Deg, 16 BARB-16MB
26	6602628	1	Split Flange Kit-2”
27	6602736	1	Hose End-ST, 24 BARB-24MB

Hopper Material Level Mechanism

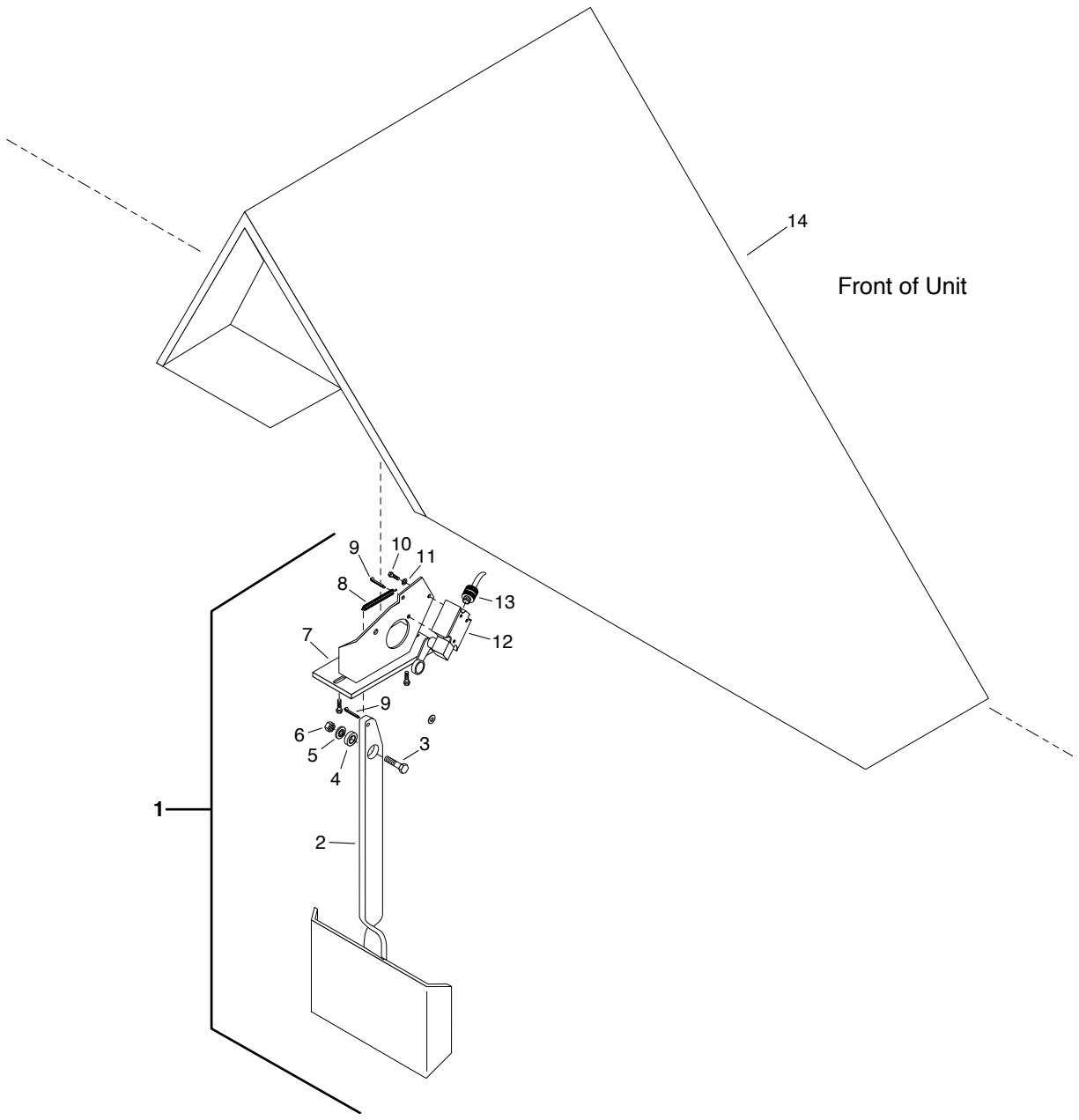

REF	PART NO.	QTY	DESCRIPTION
1	3160190	1	Switch Asm-Level Limit *(Includes Ref #'s 2-13)*
2	3100755	1	Paddle-Arm Asm
3	0122145	1	Screw-Hex, 0.38NC x 1.25, GR2, PD
4	6420035	1	Bearing-Ball, Rad, Sgl, NA, 0.3750
5	3100343	1	Spacer-Level Limit
6	0274993	1	Nut-Hex, Lock, 0.38NC, EA, PD
7	3100334	1	Bracket-Plate Assy
8	3330050	1	Spring-Smoke Stack Cover
9	0103373	2	Pin-Cotter, 0.09 x 0.75, PD
10	0121887	2	Screw-Hex, 0.25NC x 0.75, GR2, PD
11	0120380	2	Washer-Lock, 0.25, Spring, PD
12	3160042	1	Switch-Limit 1LS1
13	6701472	1	Cord-Grip, M, 0.31 x 0.50 SHC/017
14	3120020	1	Deflector-Angle

Hood Assemblies

NOTE: Ref.# 13, Hood Asm-RT, includes Ref.#s 3 thru 10 and 12. Ref.# 14 is separate.

NOTE: Ref.# 1, Hood Asm-LT, includes Ref.#s 2 thru 10. Ref.# 11 is separate.

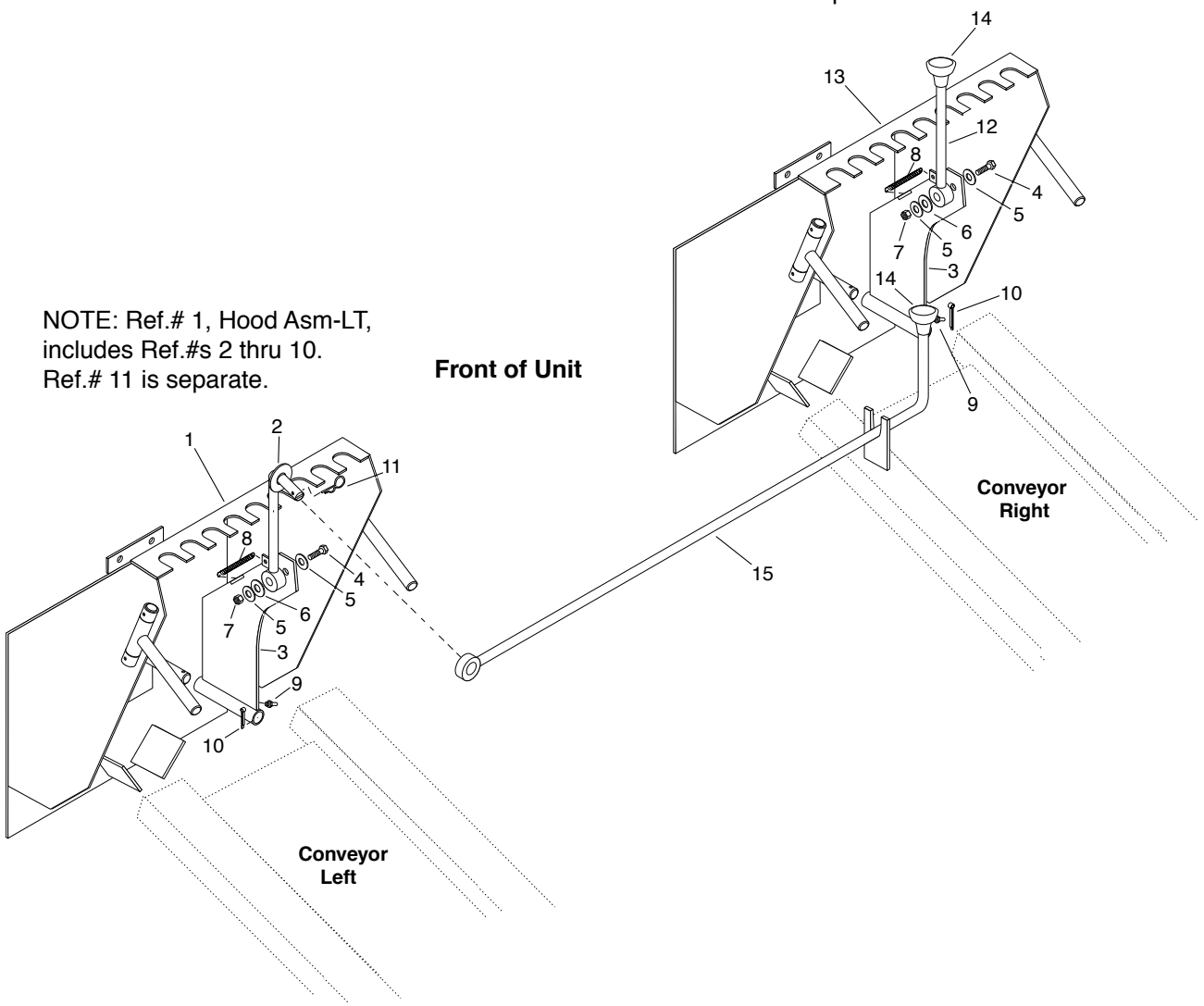

REF	PART NO.	QTY	DESCRIPTION
1	3141658	1	Hood Assembly-24” Conv. Left
	3130436	1	Frame Asm-Hood, 24” Conv.
2	3130273	1	Handle Asm-Lt, Conv. Hood
3	3130286	1	Baffle Asm-Hood, Plnt C.S.
4	0120333	1	Screw-Hex, 0.50NC x 1.75, GR2, PDR5
5	0120390	2	Washer Flat, 0.50A, W, PD
6	0131000	1	Washer Flat, 0.75A(0.81 x 2.00), PD
7	9411721	1	Nut-Hex, Lock, 0.50NC, EA, PD
8	3110472	1	Spring-Clutch Pedal Return
9	9411027	1	Fitting-Lub, Stgt x 0.50 Typ C
10	0103386	1	Pin-Cotter, 0.12 x 1.25, PD

REF	PART NO.	QTY	DESCRIPTION
11		1	Clip
12	3130271	1	Handle Asm-RT, Conv Hood-C.S.
13	3141657	1	Hood Assembly-24” Conv. Right
	3130436	1	Frame Asm-24” Conv.
14	3140029	2	Knob-Rubber
15	3130217	1	Bar Asm-Cross, Left, Hood Unlock

Engine & Conveyor Covers - Decking

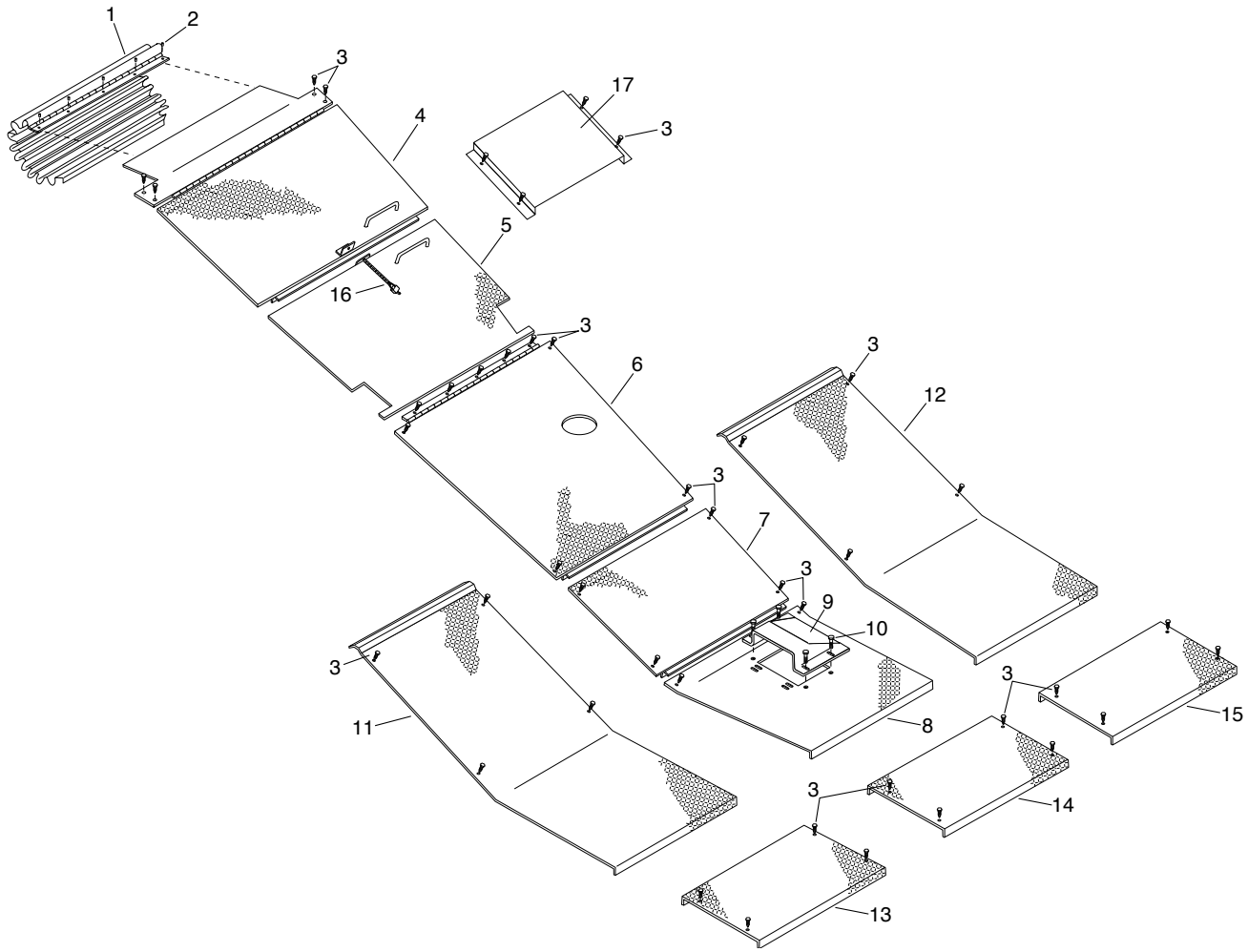

REF	PART NO.	QTY	DESCRIPTION
1	3101915	1	Cover/Grille Asm-Conv. Motors
2	4421181	5	Rivet-Pop, 0.18 x 0.687, 0.,6625HD
3	0448445	43	Hex Hd 1/4-20 x 1/2 Type F Selftp
4	3101915	1	Cover/Grille Asm-Conv Motors
5	3101909	1	Cover-Asm Rad & Cool, Bet Conv
6	3101962	1	Cover-Asm, Engine, Ctr, Chips
7	3102016	1	Decking-Center Rear, Asm
8	3102013	1	Decking-Center Frt, Asm
9	3102012	1	Cover-Deck, E-Chain
10	0120233	4	Screw-Hex, 0.38NC x 1.00, GR2, PD

REF	PART NO.	QTY	DESCRIPTION
11	3101916	1	Guard-Conveyor, LH, Hydro
12	3101917	1	Guard-Conveyor, RH, Hydro
13	3101994	1	Deck-Stl, Chair Rails, LH
14	3101963	1	Deck-Stl, Between Chair Rails
15	3101995	1	Deck-Stl, Chair Rails, RH
16	6000544	1	Padlk-Mstr. Lk#500-C, W/Chain & Key
17	3102001	1	Cover, Conveyor Front, RH

Handrails and Ladders

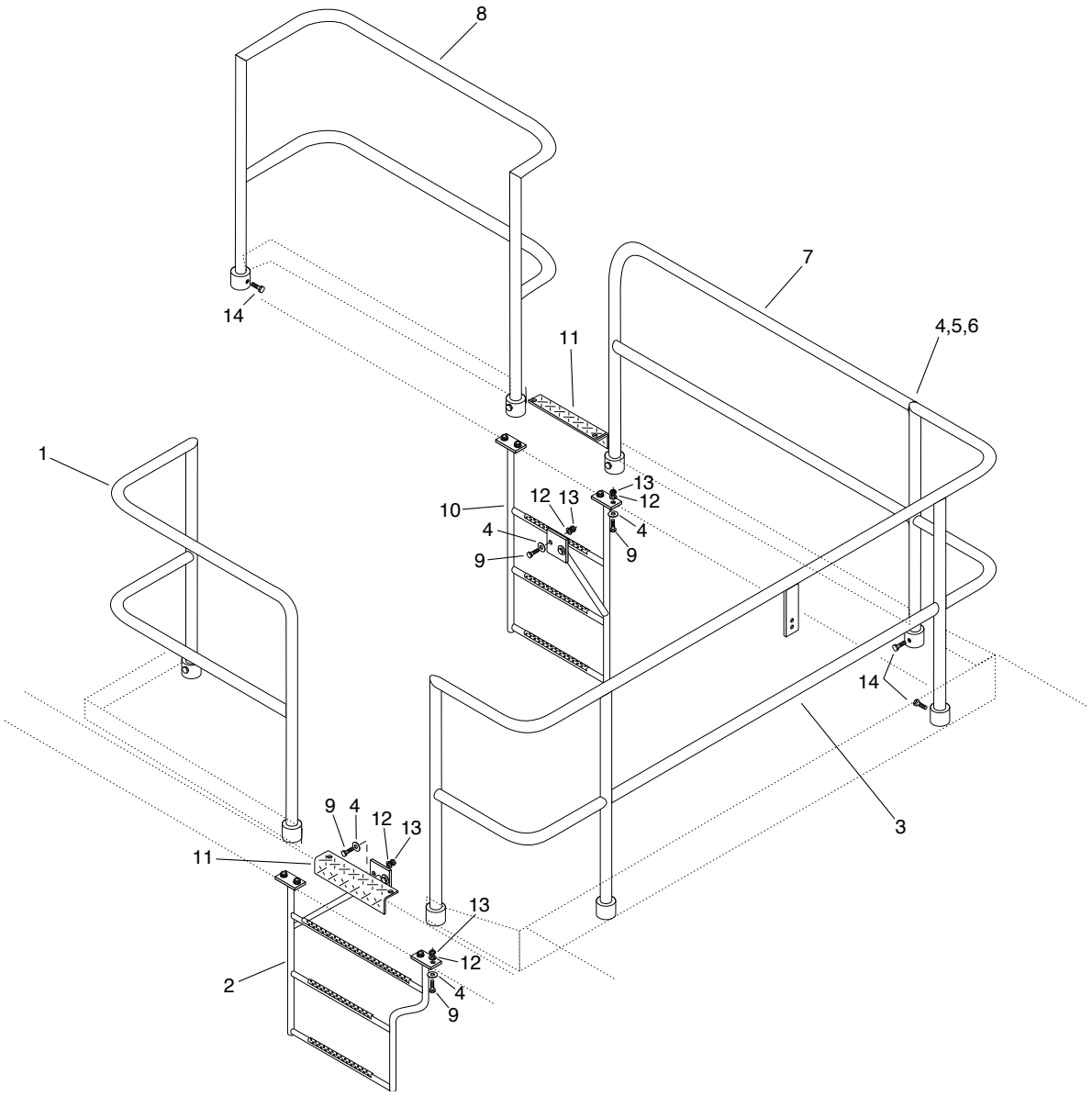

REF	PART NO.	QTY	DESCRIPTION
1	3101955	1	Handrail-Asm, Left Asm
2	3101549	1	Ladder Asm-Left Side, Hydro
3	3101325	1	Handrail Asm-RR CTWLK, Hydro
4	0446363	13	Washer-Flat, 0.31A(0.38 x 0.88)PD
5	0122077	2	Screw-Hex, 0.31NC x 2.50, GR2, PD
6	9411638	2	Nut-Hex, Lock, 0.31NC, EA, PD
7	3101951	1	Handrail-Asm, Right Side, Rear
8	3101958	1	Handrail-Asm, Right Side Front
9	6001265	12	Screw-Hex, 0.31NC x 1.00, GR8
10	3101335	1	Ladder Asm-24”, RH Side, Hydro
11	3100222	2	Step-Rough Tread
12	0120214	12	Washer-Lock, 0.31, Spring, PD
13	6001264	12	Nut-Hex, 0.31NC, GR8
14	0120233	9	Screw-Hex, 0.38NC x 1.00, GR2, PD

Battery Box Installation

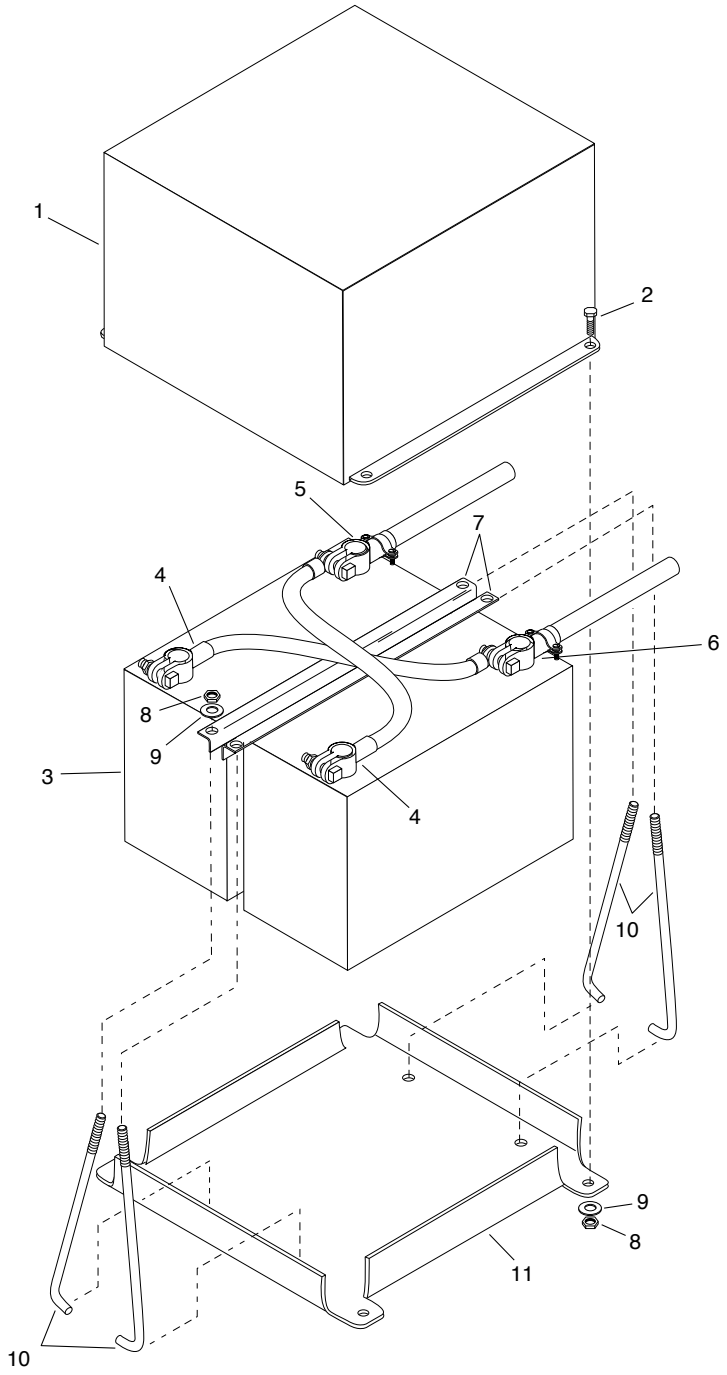

REF	PART NO.	QTY	DESCRIPTION
1	3101926	1	Battery Box-Cover Weldment
2	0121900	4	Screw-Hex, 0.25NC x 1.00, GR2, PD
3	6700240	2	Battery-12V, 72 AMP , Elec. Str., 3SM
4	3160139	2	Cable Asm-Battery, 17 In.
5	3160684	1	Cable-Battery Pos, 19”
6	3160685	1	Cable-Battery Neg, 30”
7	3101921	2	Hold Down
8	9413946	8	Nut-Hex, Lock, 0.25NC, EA, PD
9	0116091	8	Washer-Flat, 0.25A(0.28 x 0.63)BR
10	3101922	4	Rod-Hold Down
11	3101920	1	Base-Battery Box

Power Buss Bar Assembly

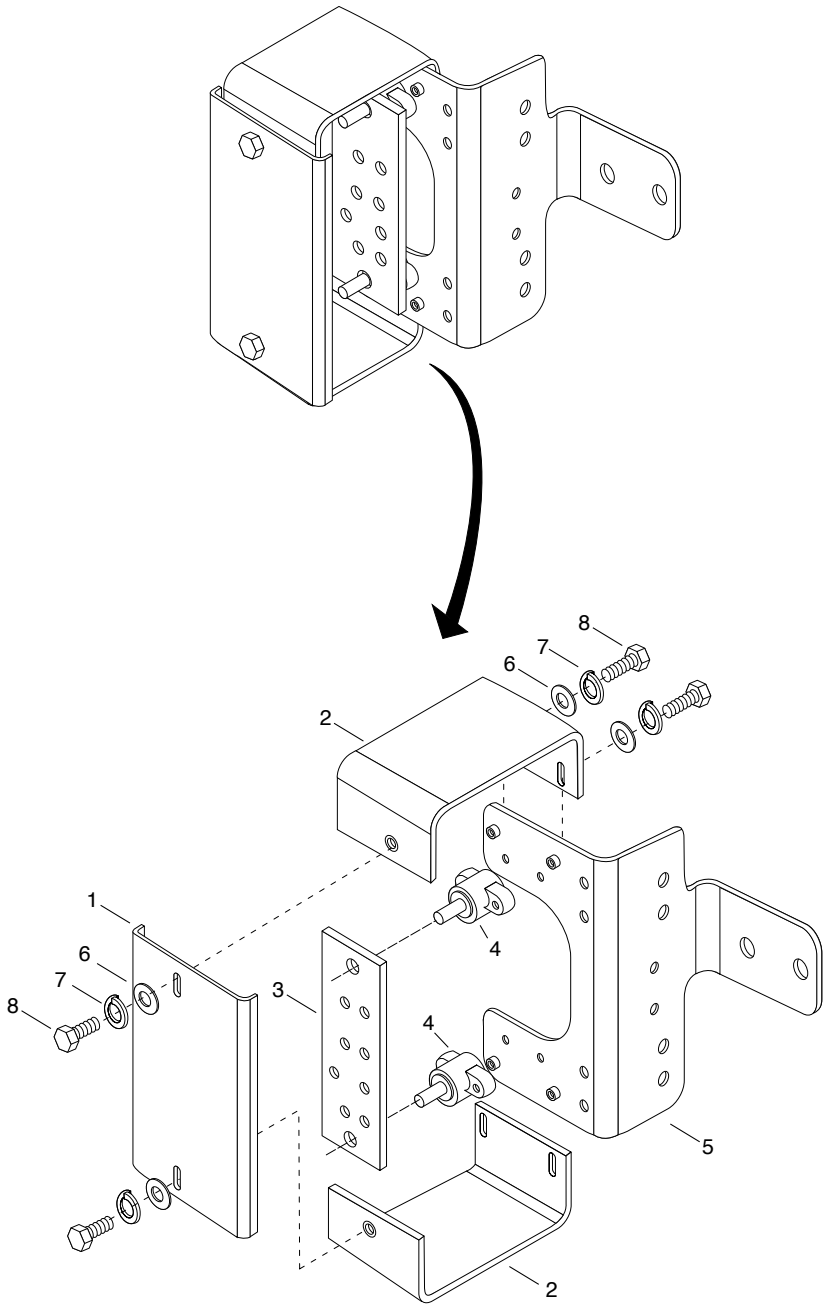

REF	PART NO.	QTY	DESCRIPTION
1	3102233	1	Cover-Buss Bar Plate
2	3102232	2	Standoff-Bass Bar Plate Cover
3	3102235	1	Buss Bar-Copper, QSB Engine
4	6703402	2	Stud-Junction, Insulated, 3/8-16
5	3102234	1	Mount-Buss Barr, QSB w/ Insert
6	0120386	6	Washer-Flat, 0.25A (0.31” x 0.73”), PD
7	0120380	6	Washer-Lock, 0.25”, Spring, PD
8	0180020	6	Screw-Hex, 0.25”NC x 0.75”, GR5, PD

REF	PART NO.	QTY	DESCRIPTION

Tire and Wheel
2WD and 4WD

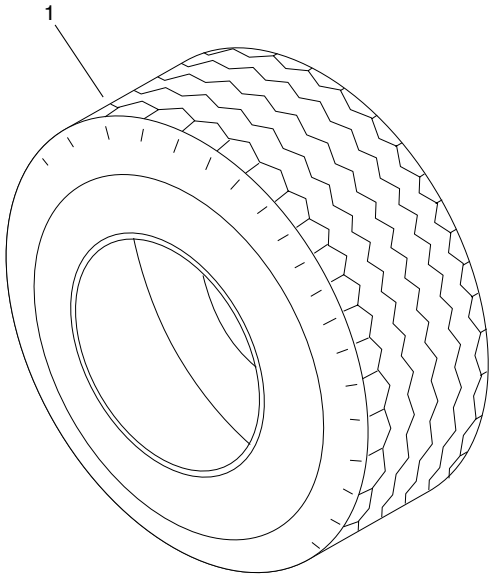

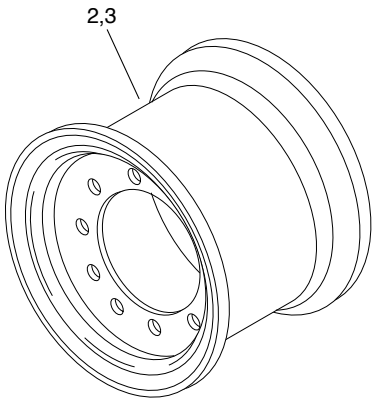

FRONT
2WD and 4WD

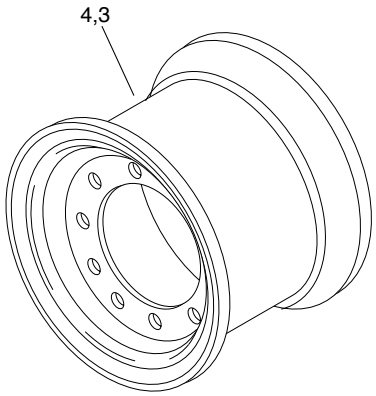

REAR
4WD

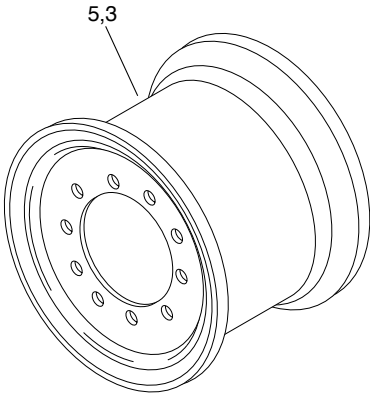

REAR
2WD

REF	PART NO.	QTY	DESCRIPTION
1	6450767	AR	Tire-385/65R22.5, 18 Ply, YOKO (4WD)
	6450766	AR	Tire-295/75R22.5, 14 Ply, YOKO (2WD)
2	3111295	2	Wheel Asm-Frt, 22.5 x 12.5 (4WD)
	3111323	2	Wheel Asm-Frt, 22.5 x 8.25 (2WD)
3	6450265	AR	Valve-Tire, Tubless Truck
4	3111320	2	Wheel Asm-Rear, 22.5 x 12.25 (4WD)
5	3111322	2	Wheel Asm-Rear, 22.5 x 8.25 (2WD)
6	7620271	AR	Nut-Wheel Mtg., .750”-16, RH, SPCR

AR - AS REQUIRED

Flashing / Rear Liner

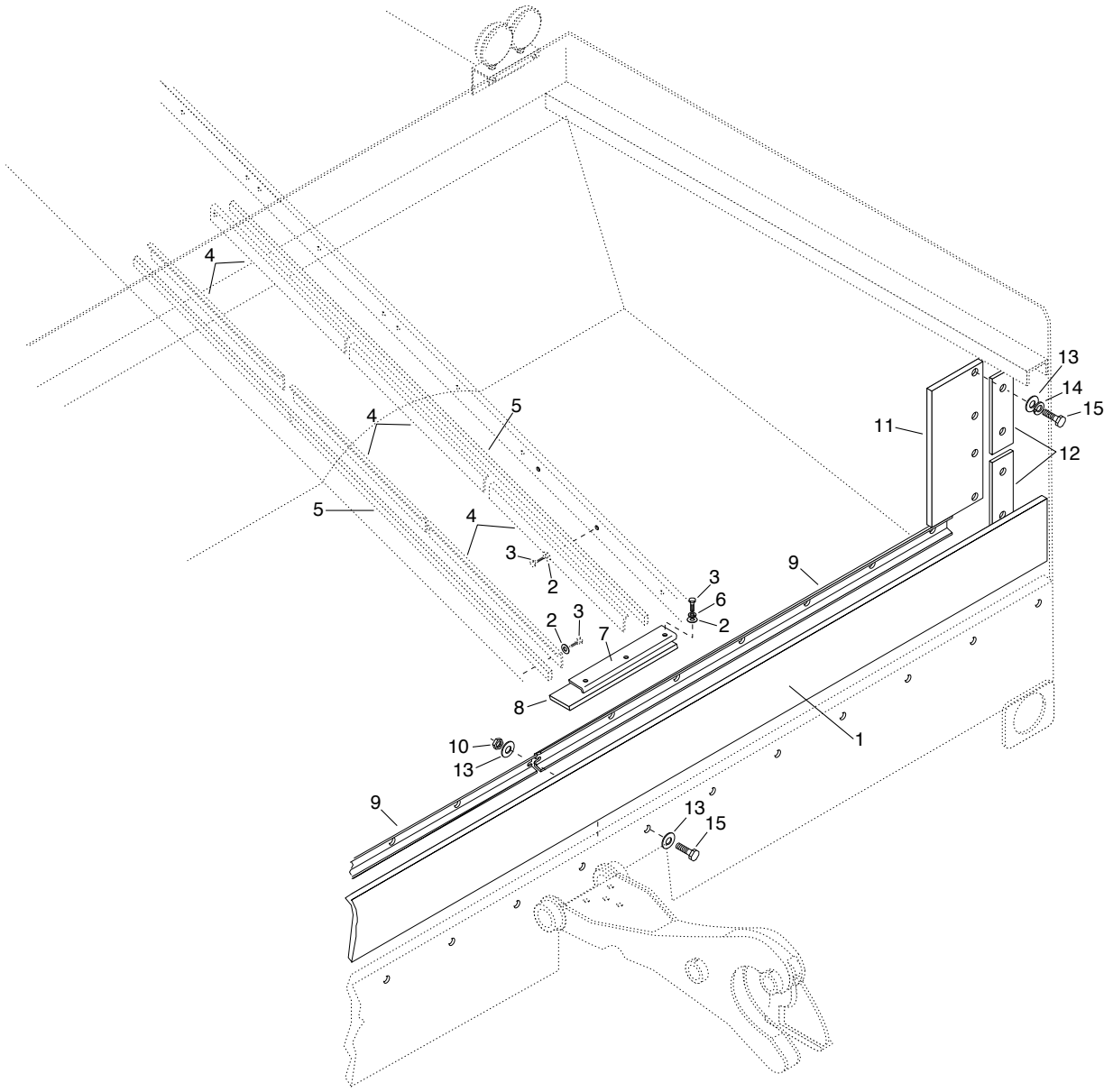

REF	PART NO.	QTY	DESCRIPTION
1	3130431	1	Skirtboard-0.56 x 9 x 113.38
2	0120388	42	Washer-Flat, 0.31A(0.44 x 1.00)
3	0122145	42	Screw-Hex, 0.38NC x 1.25, GR2, PD
4	3130428	12	Bracket-Flashing, Retainer, Side
5	3130426	4	Flashing-Conveyor, Rear Hopper
6	0120382	6	Washer-Lock, 0.38, Spring, PD
7	3130427	2	Bracket-Flashing, Retainer, Rear
8	3130429	2	Flashing-Conevyor, End
9	3130014	2	Bracket-Rear Hopper
10	9411727	13	Nut-Hex, Lock, 0.50NC, EA, PD
11	3130432	2	Skirtboard-0.56 x 9 x 17.5
12	3130088	4	Support-Chute Lining
13	3130390	21	Washer-Flat, 0.50A(0.56 x 1.38), PD
14	0120384	8	Washer-Lock, 0.50, Spring, PD
15	0122466	21	Screw-Hex, 0.50NC x 2.25, GR2, PD

Carrier Assembly - 1300
for Axle Asm 3111284

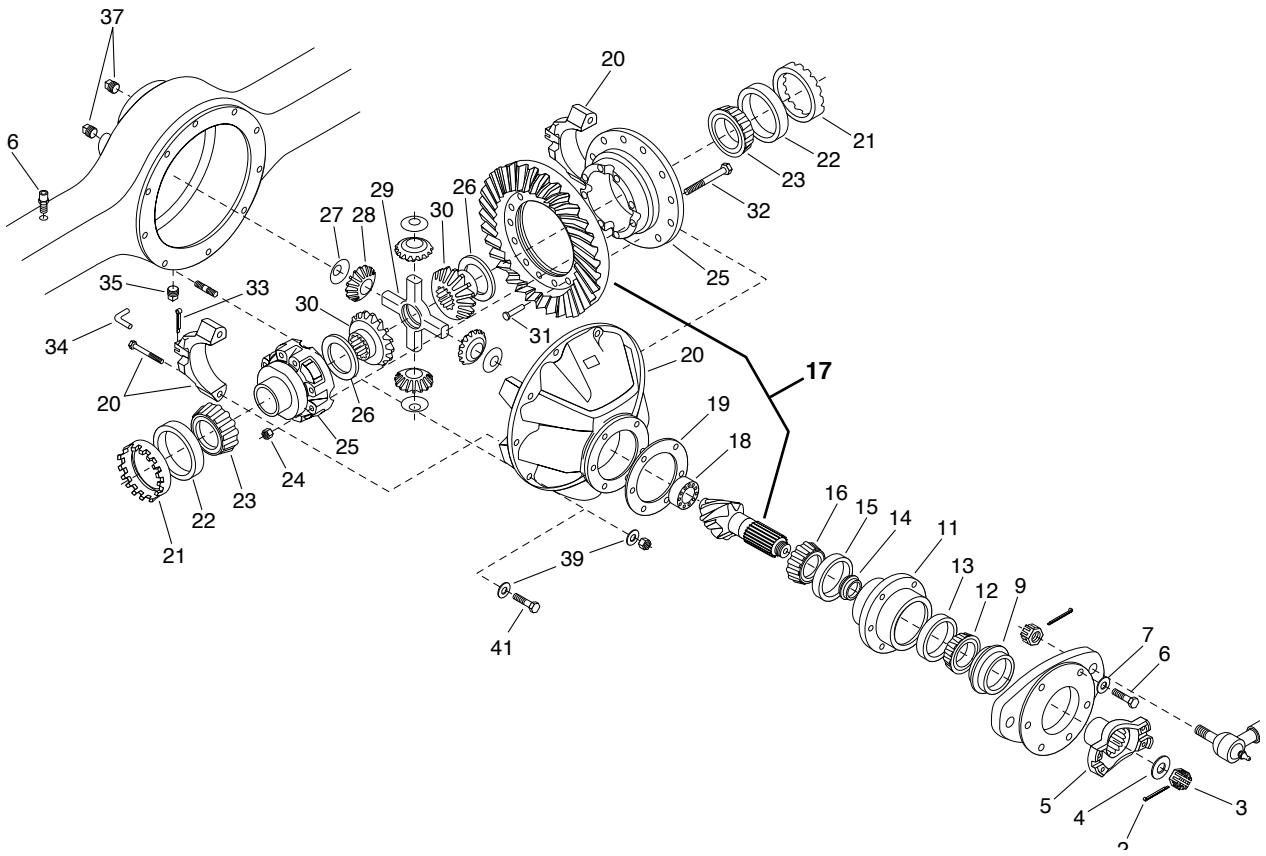

REF	PART NO.	QTY	DESCRIPTION
1	7620500	6	Bolt-Hex, 1-1/2”
	7620501	6	Bolt-Hex, 2”
	7620502	6	Bolt-Hex, 2-1/2”
2	7620481	1	Pin-Cotter
3	7620480	1	Nut-Pinion
4	7620479	1	Washer-Flat
5	7620504	1	Yoke End or Companion Flange
6	7620505	6	Bolt-Hex
7	7620506	6	Washer-Flat
8	7620503	10	Washer-Flat (Carrier Mtg.)
9	7620355	1	Seal-Oil
10	7620499	2	Plug-Pipe Recessed Drive
11	7620486	1	Cap-Bearing Retainer
12	7620474	1	Bearing-Cone (Pinion Outer)
13	7620477	1	Bearing-Cup (Pinion Outer)
14	7620473	1	Spacer-Pinion Bearing, .5305 thick
15	7620476	1	Bearing-Cup (Pinion Inner)
16	7620470	1	Bearing-Cone (Pinion Inner)
17	7620467	1	Ring Gear and Pinion Assembly *(Includes Ref #’s 18-20)*
18	7620469	1	Bearing Asm (Straight Roller)
19	7620470	1	Shim-.010
	7620471	1	Shim-.030
	7620472	2	Shim-.005
20	7620468	1	Carrier Sub-Asm *(Includes Bolt)*
21	7620482	2	Ring-Adjusting (Differential)
22	7620485	2	Bearing-Cup (Differential)
23	7620483	2	Bearing-Cone (Differential)
24	7620490	8	Nut-Lock
25	7620484	1	Kit-Diff. Case Asm *(Includes two Ref #24 & two Ref #32)*
26	7620487	2	Thrustwasher-Differential Gear
27	7620488	4	Thrustwasher-Differential Pinion
28	7620494	4	Pinion-Differential
29	7620492	1	Shaft-Differential
30	7620491	1	Gear-Differential
31	7620493	14	Rivet-Solid
32	7620489	8	Bolt-Hex
33	7620495	2	Pin-Cotter
34	7620496	2	Lock-Bearing Adjuster Ring
35	7620497	1	Plug-Pipe Recessed Drive (Mag. Drain)
36	7620498	1	Vent

Carrier Assembly - 1350
for Axle Asm - 3111285

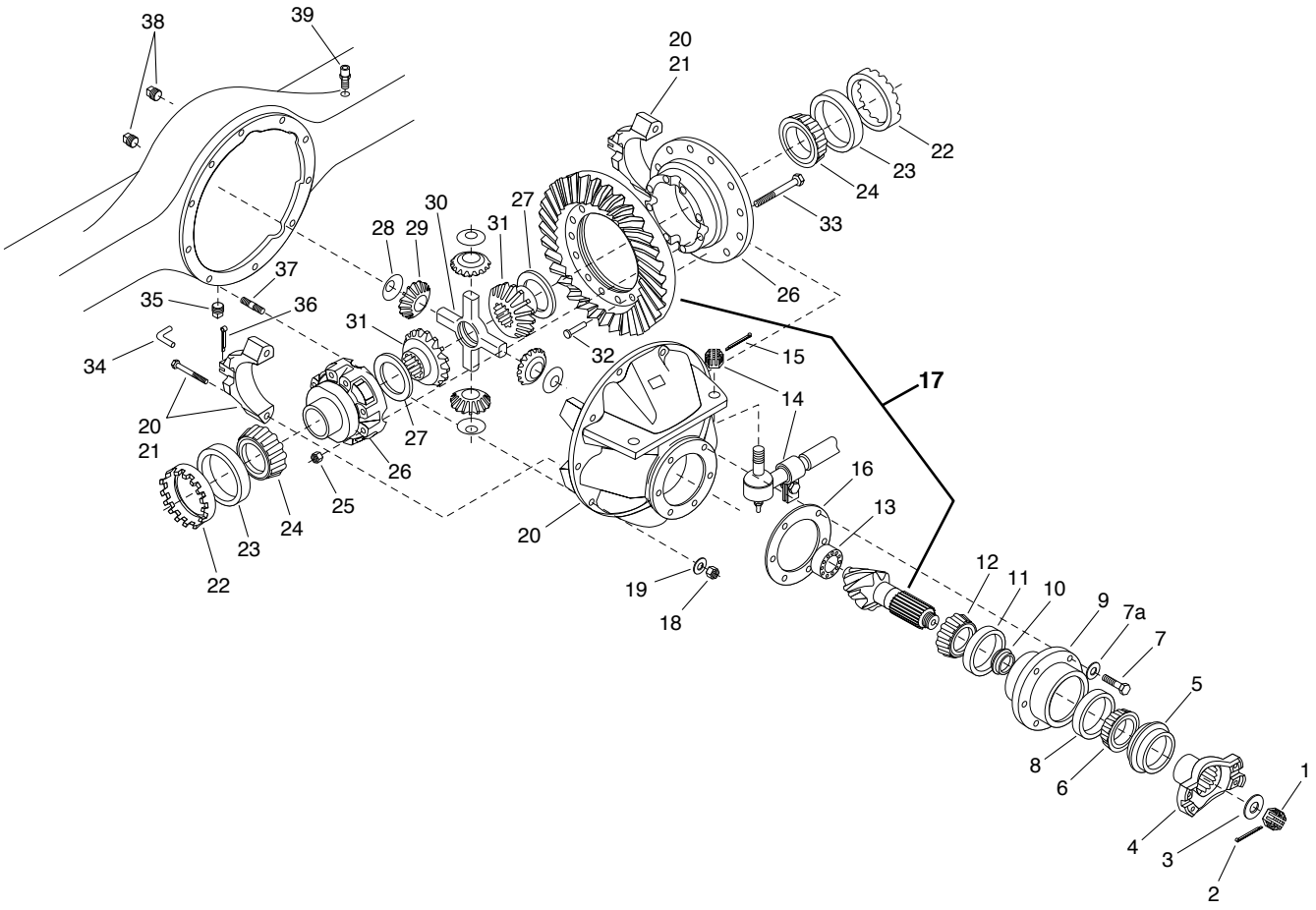

REF	PART NO.	QTY	DESCRIPTION
1	7620352	1	Nut-Pinion
2	7620353	1	Pin-Cotter
3	7620354	1	Washer-Flat
4	7620504	1	End Yoke or Companion Flange
5	7620355	1	Seal-Oil
6	7620356	1	Bearing Cone (Pinion Outer)
7	7620357	6	Bolt-Hex
7a	7620507	6	Washer-Flat
8	7620358	1	Bearing Cup (Pinion Outer)
9	7620391	1	Cap-Bearing Retainer
10	7620359	1	Spacer-Pinion Bearing
11	7620360	1	Bearing Cup (Pinion Inner)
12	7620361	1	Bearing Cone (Pinion Inner)
13	7620362	1	Bearing Asm (Straignt Roller)
14	7620363	2	Socket Asm-Steering Cylinder
15	7620364	2	Pin-Cotter (One Per Socket Asm)
16	7620365	AR	Shim-.010
	7620366	AR	Shim-.030
	7620367	AR	Shim-.005
17	7620466	1	Ring Gear and Pinion Asm *(Includes Ref #'s 13-16)*
18	7620368	10	Nut-Lock
19	7620369	10	Washer-Flat
20	7620370	1	Carrier Sub-Asm (Steering Axle Only)
22	7620371	2	Ring-Adjusting (Differential)
23	7620372	2	Bearing-Cup (Differential)
24	7620373	2	Bearing-Cone (Differential)
25	7620374	8	Nut-Lock
26	7620375	1	Kit-Differential Case Asm
27	7620376	2	Thrustwasher-Differential Gear
28	7620377	4	Thrustwasher-Differential Pinion
29	7620378	1	Pinion-Differential
30	7620379	2	Shaft-Differential Cross
31	7620380	2	Gear-Differential
32	7620381	14	Rivet-Solid
33	7620382	8	Bolt-Hex
34	7620383	2	Lock-Bearing Adjuster Ring
35	7620384	1	Plug-Pipe Recessed Drive (Mag. Drain)
36	7620385	2	Pin-Cotter
37	7620386	6	Stud (2.00", Steering Axle Only)
	7620387	6	Stud (2.38", Steering Axle Only)
	7620388	6	Stud (2.81", Steering Axle Only)
38	7620389	1	Plug-Pipe Recessed Drive
39	7620390	1	Vent

Specify Unit Serial No., Part No., & Part Description

Outer End - P1350

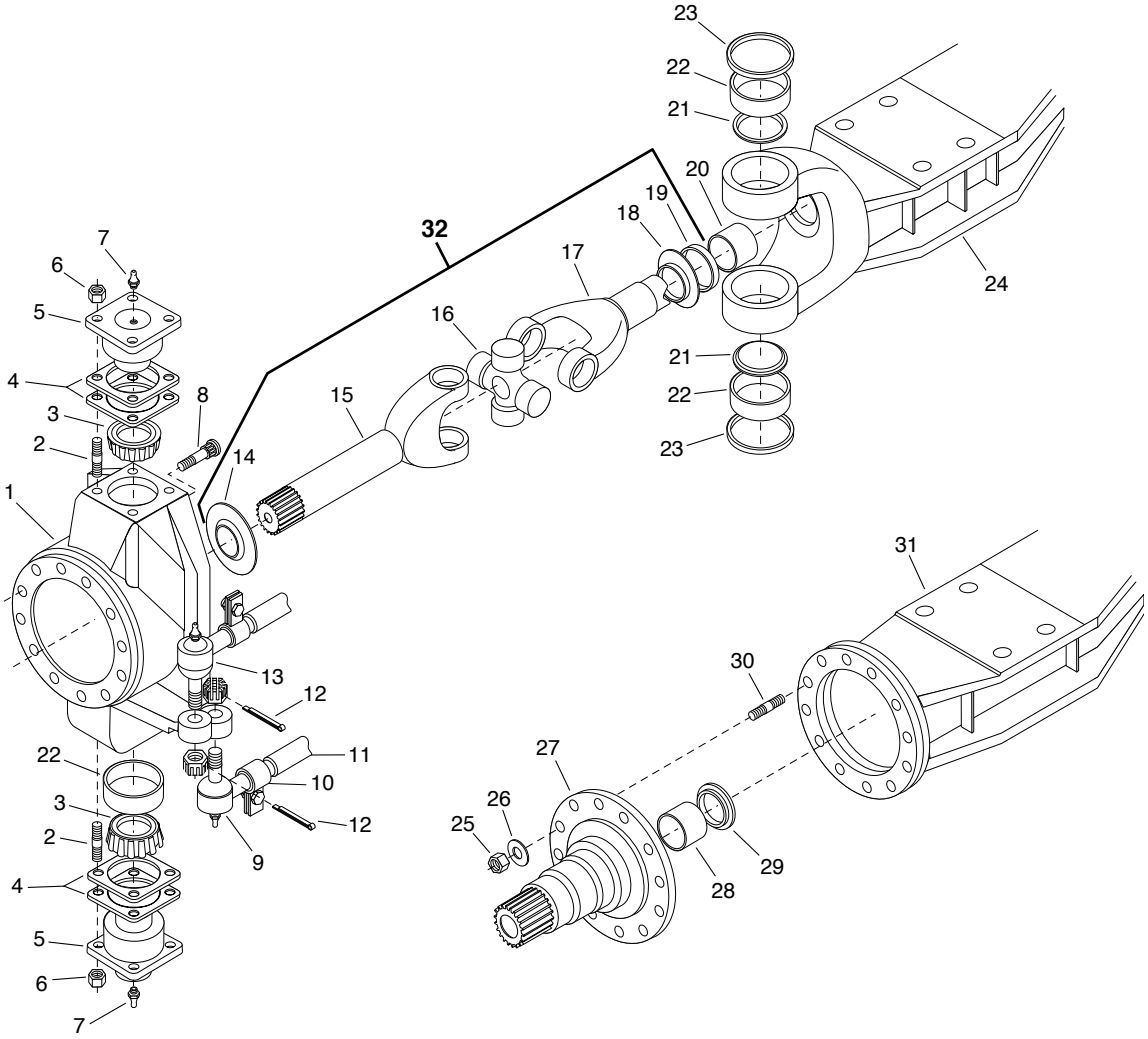

REF	PART NO.	QTY	DESCRIPTION
1	7620392	1	Knuckle-Steering RH
	7620393	1	Knuckle-Steering LH
2	7620394	8	Stud-King Pin Mounting
3	7620395	2	Bearing Cone (King Pin Cap)
4	7620396	AR	Shim-.005 (King Pin Cap)
	7620397	AR	Shim-.010 (King Pin Cap)
5	7620398	2	Cap-King Pin
6	7620399	8	Nut-Lock
7	7620400	2	Fitting-Grease
8	7620462	12	Stud-.56 (Spindle Mtg W/Disc Brake)
9	7620460	1	Socket Asm-Tie Rod (1.125-16 RH)
	7620461	1	Socket Asm-Tie Rod (1.125-12 RH)
10		1	Clamp Asm-Tie Rod
11	7620459	1	Tie Rod (includes 9 & 10)
12	7620401	2	Pin-Cotter (One Per Socket Asm)
13	7620458	1	Socket Asm-Steering Cylinder
14	7620402	1	Slinger-Dust
15	7620403	1	Shaft-Spindle Yoke Outer(RH & LH)
16	7620404	1	Cross Asm-U Joint
17	7620463	1	Shaft-Inner Yoke
18	7620405	1	Slinger-Dust
19	7620406	1	Seal-Oil
20	7620407	2	Bushing
21	7620408	2	Retainer-Grease
22	7620409	2	Bearing-Cup (King Pin)
23	7620410	2	Seal-King Pin
24	7620411	1	Axle Housing-Steering
25	7620412	12	Nut-Lock,
26	7620413	12	Washer-Flat
27	7620414	1	Spindle-Wheel (Steering Axle)
	7620415	1	Spindle-Wheel (Rigid Axle)
28	7620416	1	Bushing-Spindle
29	7620457	1	Seal-Oil
30	7620508	1	Stud-.56
31	7620417	1	Axle Housing-Rigid
32	7620464	1	Shaft & U Joint Asm
			(Includes Ref #'s 14-19)
			AR - AS REQUIRED

Steering Cylinder

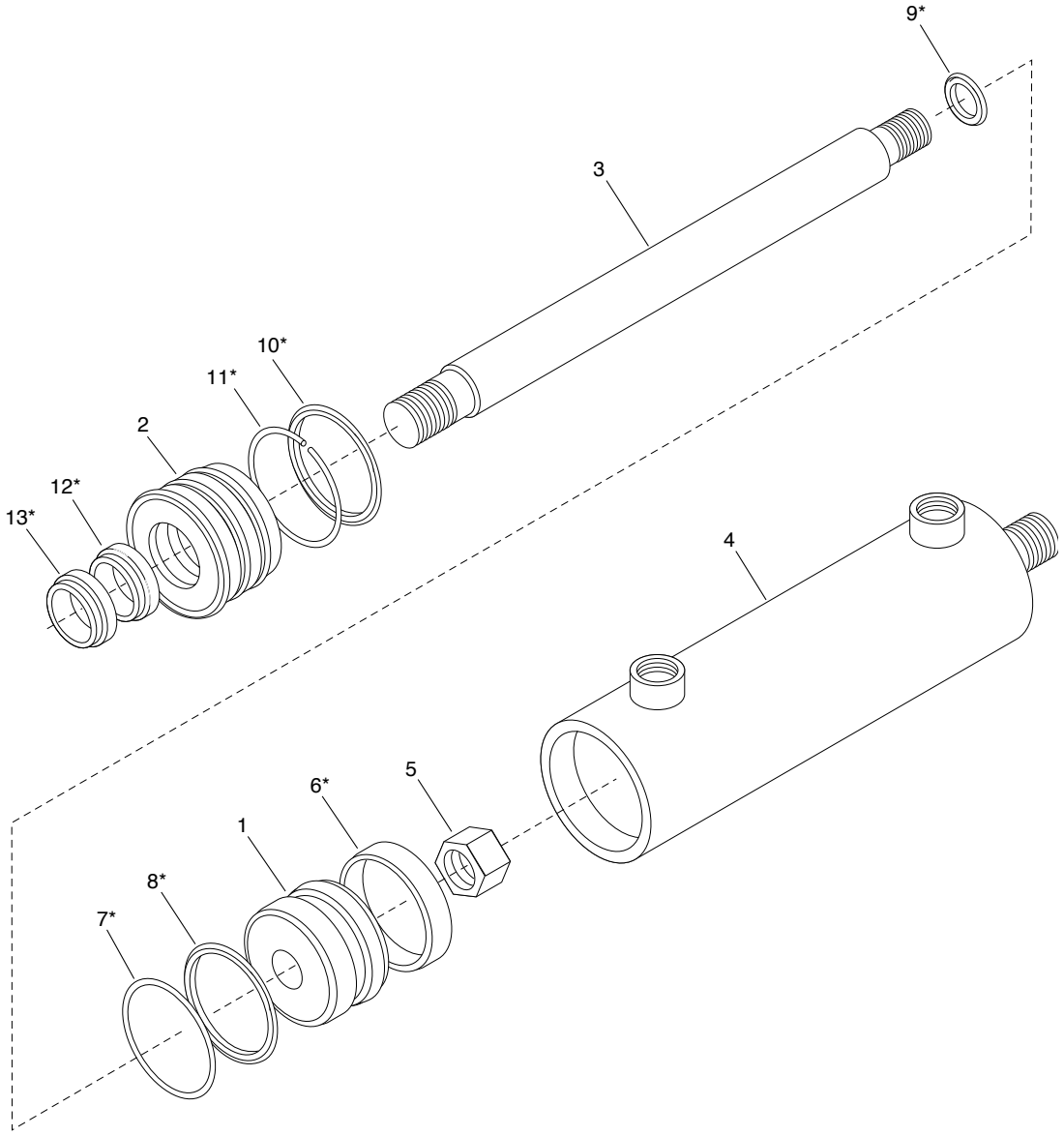

REF	PART NO.	QTY	DESCRIPTION
1		1	Piston
2		1	Gland
3		1	Rod
4		1	Barrel Asm
5		1	Locknut
6		1	Wear Strip
7		1	Slipper Seal
8		1	O-Ring
9		1	Rod Static Seal
10		1	Gland Static Seal
11		1	Lockwire
12		1	Rod Seal U-Cup
13		1	Rod Wiper
*	7620456	1	Kit Seal *(Includes Ref #'s 6 thru 13)*

REF	PART NO.	QTY	DESCRIPTION

Wet Disc Brake Wheel End - 3.65 Reduction
7620418

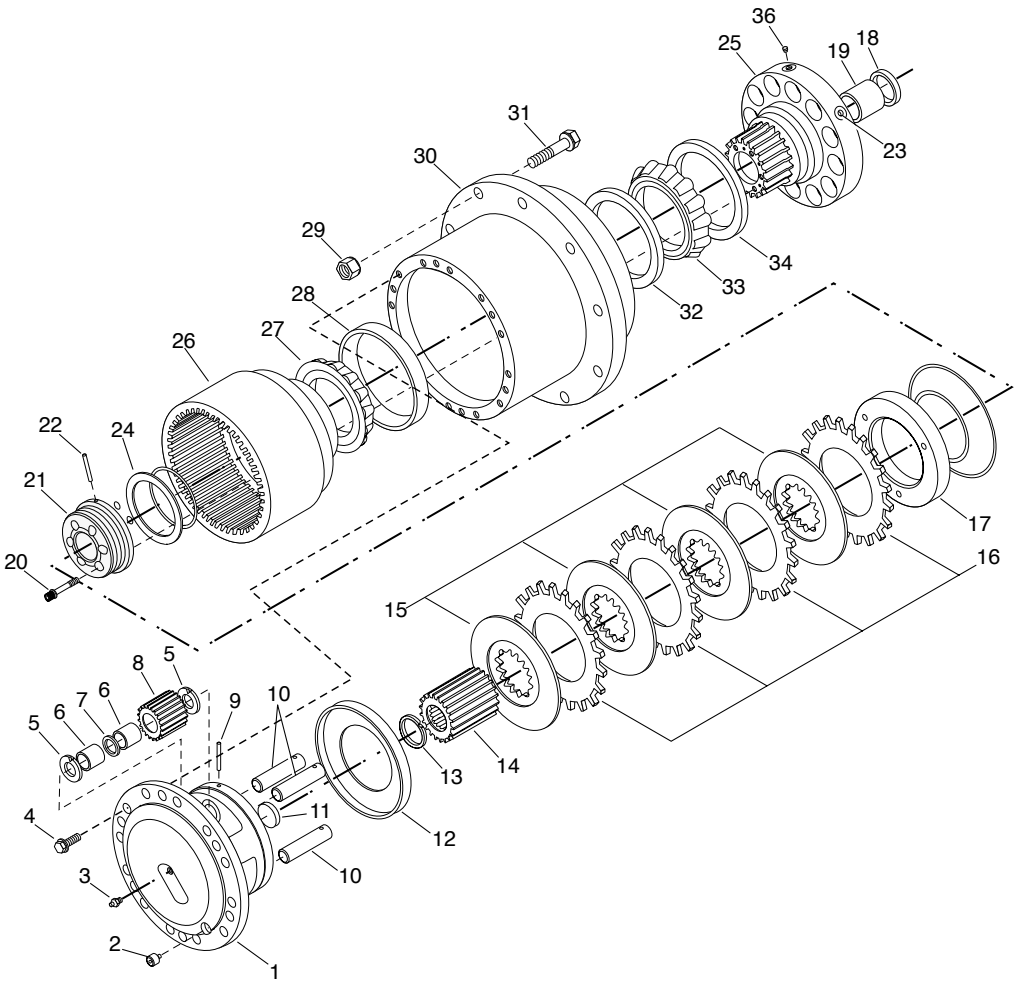

REF	PART NO.	QTY	DESCRIPTION
1	7620419	1	Flange-Drive Planetary
2	7620420	1	Plug-Pipe Recessed Drive (Magnetic)
3	7620421	1	Vent
4	7620422	18	Screw-Hex, Self Locking
5	7620423	6	Washer-Keyed
6	7620424	150	Bearing-Needle Roller
7	7620425	3	Washer-Planet Gear
8	7620426	3	Gear-Spur Planet
9	7620427	3	Pin-Roll
10	7620428	3	Shaft-Planet Gear
11	7620429	1	Washer-Drive Flange
12	7620430	1	Plate-Lining Stop
13	7620431	1	Ring-Snap (Rigid Axle)
	7620432	1	Ring-Snap (Steering Axle)
14	7620433	1	Gear-Spur (Rigid Axle)
	7620434	1	Gear-Spur (Steering Axle)
15		4	Disc Asm-Friction
16		4	Plate-Lining Stop
17	7620435	1	Piston
18	7620452	1	Seal-Oil (Rigid Axle)
	7620453	1	Seal-Oil (Steering Axle)
	7620454	1	Kit-Discs & Plates *(Includes Ref 3's 15 & 16)*

REF	PART NO.	QTY	DESCRIPTION
18	7620455	1	Kit-O-Rings *(Includes Ref #'s 18, 19, 23, 25)*
19	7620450	1	Bushing-Spindle (Rigid Axle)
	7620451	1	Bushing-Spindle (Steering Axle)
20	7620478	6	Screw-12 Point Cap
21	7620436	1	Retainer-Bearing Adjusting Ring
22	7620437	1	Tubing-Brake
23	7620449	2	Seat-Insert
24	7620438	AR	Shim-Adjusting, .010
25	7620447	1	Spindle-Wheel (Rigid Mount)
	7620448	1	Spindle-Wheel (Steering Axle)
26	7620439	1	Gear-Planteary Ring
27	7620440	1	Bearing-Cone (Outer)
28	7620441	1	Bearing-Cup (Outer)
29	7620442	12	Nut-Wheel Mtg. (3/4-16 RH)
30	7620443	1	Hub
31		AR	Bolt-Wheel Mtg.
32	7620444	1	Bearing-Cup (Inner)
33	7620445	1	Bearing-Cone (Inner)
34	7620446	1	Seal-Oil

AR - AS REQUIRED

HYDRAULIC TUBE FITTING “O” RING SEALS
(for use in straight thread “O” Ring Bosses)

Replaceable “O” Rings for MB Hydraulic Fittings are as follows:

SIZE	PART NO.	SIZE	PART NO.
0.25”	0274244	0.88”	0274250
0.38”	0274246	1.00”	0274251
0.50”	0274247	1.25”	0274252
0.62”	0274248	1.50”	0274253
0.75”	0274248		

ASSEMBLY CONSIDERATIONS: Where assembling these “O” Ring style hydraulic fittings, the “O” Ring shall be lubricated with a light oil or petrolaturm prior to assembly.

DECIMAL EQUIVALENT CHART

Decimal	Fraction	Decimal	Fraction	Decimal	Fraction
.06	1/16	.31	5/16	.69	11/16
.09	3/32	.38	3/8	.75	3/4
.12	1/8	.44	7/16	.81	13/16
.16	5/32	.50	1/2	.88	7/8
.19	3/16	.56	9/16	.94	15/16
.25	1/4	.62	5/8	1.00	1

HYDRAULIC FITTING CODE

LETTER DESIGNATION

MP - Male Pipe Thread

FP - Female Pipe Thread

MB - Male “O” Ring Boss

MJ - Male JIC, 37

FJ - Female JIC, 37

FL - “O” Ring Flange

MS - Male SAE, 45

C - Compression Fitting (Ferrul Type)

X - Swivel

SIZE

Size is represented in sizteenths of an inch. One inch equals 16, one half inch equals 08.

02 - 1/8	10 - 5/8	18 - 1 1/8
04 - 1/4	12 - 3/4	20 - 1 1/4
06 - 3/8	14 - 7/8	24 - 1 1/2
08 - 1/2	16 - 1	28 - 1 3/4

EXAMPLE: The description for a “1/2” 90 degree Hydraulic Elbow, Male NPT to Female NPT Swivel, would be as follows:

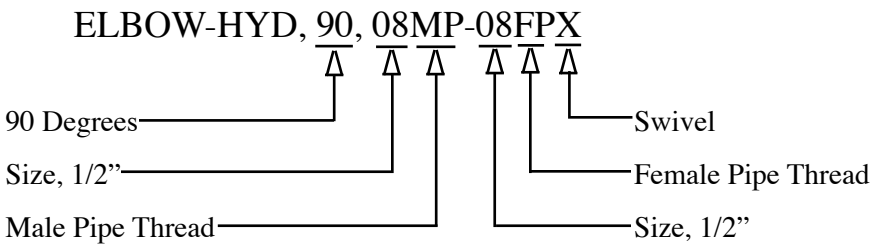

Part No.	Page No.	Part No.	Page No.	Part No.	Page No.	Part No.	Page No.	Part No.	Page No.
0102582	23	0120382	47	0124589	43	3100078	39	3102030	13
0103373	51	0120382	50	0124589	47	3100096	43	3102031	13
0103374	13	0120382	58	0127993	49	3100172	23	3102032	11
0103374	47	0120383	29	0130999	43	3100174	43	3102032	13
0103375	39	0120383	31	0131000	11	3100222	54	3102033	13
0103384	29	0120383	47	0131000	13	3100231	27	3102034	13
0103384	31	0120384	23	0131000	52	3100293	29	3102035	13
0103386	39	0120384	25	0131001	11	3100293	31	3102059	13
0103386	52	0120384	41	0131017	47	3100334	51	3102065	5
0103411	11	0120384	43	0131046	11	3100343	51	3102065-A	5
0105408	43	0120384	58	0131046	13	3100396	27	3102065-B	5
0106649	50	0120386	23	0131046	32	3100397	27	3102065-C	5
0109462	39	0120386	56	0180020	56	3100398	27	3102065-D	5
0114796	43	0120388	13	0180183	43	3100475	26	3102065-E	5
0116091	55	0120388	25	0186646	43	3100566	23	3102065-F	5
0119099	31	0120388	26	0190724	31	3100689	5	3102065-G	5
0120214	11	0120388	47	0191966	43	3100755	51	3102065-H	5
0120214	13	0120388	58	0219187	33	3101069	49	3102065-J	5
0120214	25	0120390	25	0219189	47	3101268	5	3102065-K	5
0120214	43	0120390	39	0219190	31	3101325	54	3102065-L	5
0120214	54	0120390	52	0219303	47	3101335	54	3102065-M	5
0120233	11	0120426	29	0220086	13	3101549	54	3102065-N	5
0120233	13	0120426	41	0220086	32	3101568	49	3102066-A	5
0120233	25	0120622	25	0223022	23	3101613	47	3102066-B	5
0120233	27	0120706	13	0271501	47	3101666	47	3102066-C	5
0120233	43	0120898	32	0272123	29	3101886	47	3102066-D	5
0120233	47	0120900	26	0272123	31	3101909	53	3102232	56
0120233	50	0120918	47	0272123	31	3101915	53	3102233	56
0120233	53	0120918	50	0274244	64	3101915	53	3102234	56
0120233	54	0121358	25	0274246	64	3101916	53	3102235	56
0120238	39	0121574	25	0274247	64	3101917	53	3103066	5
0120333	23	0121574	47	0274248	64	3101920	55	3110033	23
0120333	25	0121661	13	0274249	64	3101921	55	3110054	23
0120333	52	0121841	25	0274250	64	3101922	55	3110073	32
0120375	13	0121852	27	0274251	64	3101926	55	3110073	35
0120375	25	0121887	23	0274252	64	3101935	49	3110472	52
0120375	27	0121887	25	0274253	64	3101938	49	3110752	48
0120376	11	0121887	51	0274517	49	3101940	49	3110993	47
0120376	13	0121893	27	0274993	25	3101951	54	3111174	47
0120376	43	0121893	29	0274993	27	3101955	54	3111190	47
0120377	11	0121893	31	0274993	47	3101958	54	3111192	47
0120377	23	0121900	55	0274993	51	3101959	32	3111195	47
0120377	26	0122007	25	0410200	32	3101962	53	3111197	47
0120377	27	0122017	11	0426099	11	3101963	53	3111200	47
0120377	39	0122077	54	0428697	25	3101987	13	3111201	47
0120377	43	0122145	23	0428715	47	3101988	13	3111215	47
0120377	47	0122145	49	0436699	25	3101991	13	3111217	47
0120377	50	0122145	51	0446363	11	3101992	13	3111284	44
0120378	25	0122145	58	0446363	13	3101994	53	3111284	45
0120378	43	0122181	39	0446363	54	3101995	53	3111284	47
0120380	13	0122207	25	0448445	53	3101999	5	3111284	59
0120380	25	0122307	45	0454109	39	3102000	5	3111285	44
0120380	27	0122333	45	0454778	32	3102001	53	3111285	47
0120380	51	0122333	47	0455481	29	3102012	53	3111285	60
0120380	56	0122408	23	0455481	31	3102013	53	3111286	32
0120382	11	0122408	27	0457008	11	3102016	53	3111286	35
0120382	13	0122459	23	0457008	39	3102021	13	3111287	35
0120382	25	0122459	25	0457008	43	3102022	13	3111288	32
0120382	27	0122466	58	3100049	43	3102024	13	3111288	35
0120382	39	0124589	25	3100050	43	3102027	25	3111295	57
0120382	43	0124589	39	3100061	39	3102029	25	3111298	32

Part No.	Page No.	Part No.	Page No.	Part No.	Page No.	Part No.	Page No.	Part No.	Page No.
3111305	32	3130444	39	3140329	27	3140660	31	3160104	7
3111310	45	3130446	39	3140330	27	3140668	31	3160105	7
3111310	47	3130447	39	3140331	27	3140669	31	3160139	55
3111320	57	3130448	39	3140332	27	3140670	31	3160190	51
3111322	57	3140029	27	3140333	27	3140671	31	3160335	31
3111323	57	3140029	29	3140334	27	3140672	31	3160336	31
3111332	47	3140029	31	3140335	27	3140674	31	3160543	25
3111362	47	3140029	52	3140344	27	3141071	23	3160655	9
3120020	51	3140063	29	3140345	27	3141081	29	3160684	55
3120056	27	3140064	29	3140346	27	3141083	23	3160685	55
3120059	27	3140065	29	3140347	27	3141090	31	3160687	32
3120060	27	3140066	29	3140348	27	3141113	29	3160688	7
3120745	11	3140075	23	3140350	27	3141113	31	3160692	7
3120748	11	3140083	23	3140358	27	3141124	29	3160693	7
3120756	11	3140094	43	3140361	27	3141124	31	3160696	9
3120762	41	3140113	23	3140362	27	3141140	25	3170059	23
3120767	25	3140114	23	3140363	27	3141141	25	3170059	27
3120770	25	3140115	23	3140364	23	3141143	23	3170061	23
3120783	13	3140116	23	3140365	23	3141146	23	3170061	25
3120784	13	3140117	39	3140366	23	3141154	23	3180945	43
3130003	43	3140194	29	3140367	23	3141156	23	3181072	35
3130004	39	3140194	31	3140372	29	3141158	23	3181072	37
3130007	39	3140243	23	3140372	31	3141160	23	3181075	32
3130011	39	3140244	23	3140401	23	3141162	23	3181075	35
3130014	58	3140245	23	3140402	23	3141164	23	3181076	35
3130055	43	3140246	23	3140404	23	3141174	23	3181076	37
3130059	39	3140247	23	3140404	27	3141176	23	3181077	41
3130067	39	3140248	23	3140407	29	3141177	23	3181080	11
3130083	43	3140249	23	3140407	31	3141178	23	3181088	50
3130088	58	3140264	26	3140423	29	3141179	23	3181094	50
3130095	43	3140268	26	3140423	31	3141180	23	3181095	50
3130217	52	3140288	29	3140424	29	3141181	23	3181096	50
3130271	52	3140288	31	3140424	31	3141181	23	3181097	50
3130273	52	3140289	29	3140426	29	3141182	23	3181098	50
3130286	52	3140289	31	3140430	23	3141183	23	3181101	44
3130359	39	3140290	29	3140439	27	3141184	23	3181101	45
3130363	39	3140290	31	3140440	27	3141185	23	3181122	35
3130364	39	3140291	29	3140441	27	3141186	23	3181124	35
3130390	58	3140291	31	3140442	23	3141190	23	3181124	37
3130395	43	3140292	29	3140492	29	3141210	23	3181134	44
3130398	43	3140292	31	3140492	31	3141211	23	3181134	45
3130402	43	3140293	29	3140498	26	3141212	23	3181153	44
3130405	39	3140293	31	3140498	29	3141213	23	3181153	45
3130406	7	3140294	29	3140499	26	3141214	23	3181195	35
3130417	39	3140294	31	3140499	29	3141219	23	3181195	37
3130418	39	3140295	29	3140500	26	3141224	23	3181196	33
3130419	39	3140295	31	3140501	26	3141657	52	3181196	35
3130420	39	3140296	29	3140550	25	3141658	52	3181196	37
3130422	43	3140296	31	3140553	25	3150120	29	3181196	41
3130423	43	3140297	29	3140562	29	3150665	39	3181198	37
3130424	43	3140297	31	3140563	29	3150760	11	3181198	41
3130426	58	3140298	29	3140574	29	3150764	11	3181199	35
3130427	58	3140298	31	3140574	31	3150811	39	3181201	41
3130428	58	3140303	29	3140582	23	3150812	11	3181202	41
3130429	58	3140303	31	3140587	23	3150816	9	3181202	45
3130431	58	3140310	25	3140596	23	3150823	11	3181204	41
3130432	58	3140323	29	3140634	25	3150824	11	3181206	33
3130436	52	3140323	31	3140635	25	3160040	9	3181206	41
3130439	39	3140324	29	3140638	23	3160042	51	3181208	44
3130440	39	3140324	31	3140646	23	3160067	7	3181208	45
3130441	39	3140328	27	3140649	25	3160102	9	3181209	32

Part No.	Page No.	Part No.	Page No.	Part No.	Page No.	Part No.	Page No.	Part No.	Page No.
3181209	35	6000088	47	6400281	47	6601548	31	6602765	33
3181209	37	6000108	43	6400299	49	6601568	41	6700072	9
3181209	39	6000207	13	6400359	11	6601704	11	6700139	9
3181210	35	6000224	43	6400361	47	6601781	25	6700161	9
3181210	37	6000233	33	6400604	15	6601781	39	6700164	9
3181211	44	6000367	39	6410080	15	6601811	35	6700188	9
3181211	45	6000397	13	6420035	51	6601811	37	6700240	55
3181212	44	6000401	39	6420066	25	6601889	35	6700306	9
3181212	45	6000403	39	6420066	25	6601889	37	6700400	33
3181213	44	6000455	47	6420067	25	6601894	33	6700748	13
3181213	45	6000544	11	6420086	43	6602021	35	6700750	9
3181214	44	6000544	53	6420105	13	6602021	37	6700771	9
3181214	45	6000550	43	6420106	39	6602078	44	6700772	9
3181215	44	6000732	26	6430077	13	6602078	45	6700921	9
3181216	44	6000737	25	6430164	13	6602154	35	6700923	9
3181218	44	6000758	5	6430171	13	6602154	37	6701467	9
3181218	45	6000916	47	6435459	11	6602154	44	6701468	9
3181226	41	6000937	49	6435459	13	6602154	45	6701472	51
3181228	50	6000938	49	6435478	43	6602214	33	6701938	9
3181232	33	6000953	47	6435479	43	6602296	31	6701940	9
3181233	47	6000999	47	6445077	43	6602297	31	6701946	9
3181234	35	6001049	47	6450265	57	6602363	11	6701949	9
3181234	37	6001054	11	6450766	57	6602376	41	6701951	9
3181239	11	6001079	11	6450767	57	6602376	43	6702014	13
3181239	35	6001081	47	6600162	47	6602578	39	6702015	13
3181239	37	6001082	47	6600224	33	6602579	39	6702024	9
3181240	11	6001148	11	6600236	35	6602601	35	6702028	9
3181241	11	6001264	54	6600236	37	6602601	37	6702029	9
3181241	44	6001265	54	6600903	35	6602603	11	6702171	25
3181241	45	6001445	47	6600903	37	6602604	50	6702194	9
3181242	11	6100028	29	6600903	41	6602610	35	6702224	9
3181242	35	6100028	31	6600906	47	6602610	37	6702227	9
3181242	37	6100035	25	6600906	50	6602617	50	6702228	9
3181243	35	6100035	27	6600910	23	6602618	50	6702333	9
3181243	37	6100082	23	6600910	41	6602619	50	6702526	9
3181243	39	6100086	47	6601008	35	6602620	35	6702537	13
3181245	35	6100126	29	6601008	37	6602621	32	6702542	13
3181245	37	6100126	31	6601039	33	6602621	35	6702543	9
3181245	39	6100174	11	6601045	35	6602621	37	6702544	9
3181246	35	6100267	47	6601045	37	6602622	35	6702545	9
3181246	37	6100277	13	6601064	50	6602622	37	6702546	9
3181246	39	6100277	43	6601122	11	6602624	32	6702547	9
3181247	11	6100297	32	6601125	33	6602624	35	6702548	9
3181247	33	6100325	25	6601143	11	6602624	37	6702549	9
3181282	25	6200468	50	6601143	45	6602625	50	6702550	9
3181283	25	6200599	31	6601157	47	6602628	50	6702551	9
3181288	50	6200600	31	6601184	47	6602634	11	6702555	9
3181343	50	6300029	29	6601210	32	6602635	11	6703153	9
3181378	35	6300029	31	6601210	35	6602645	23	6703402	56
3181378	37	6309069	43	6601210	37	6602649	35	7050104	11
3181382	35	6309329	47	6601213	35	6602650	35	7050105	11
3181382	37	6309330	47	6601213	37	6602680	45	7050106	11
3330026	33	6400139	48	6601381	35	6602685	33	7050127	43
3330050	51	6400142	48	6601381	37	6602728	41	7050128	43
3350231	13	6400143	48	6601381	39	6602735	50	7050981	11
3350232	13	6400149	48	6601418	35	6602736	50	7050982	11
3350672	13	6400150	48	6601418	37	6602737	41	7050983	11
3360269	29	6400151	48	6601488	31	6602751	39	7050990	47
3360269	31	6400152	48	6601489	31	6602756	33	7215020	29
4421181	53	6400264	48	6601490	31	6602762	33	7215020	31
4470915	33	6400264	50	6601504	25	6602764	50	7215236	11

Part No.	Page No.	Part No.	Page No.	Part No.	Page No.	Part No.	Page No.	Part No.	Page No.
7215237	11	7430284	41	7620404	61	7620466	60	9410283	37
7360010	48	7430285	35	7620405	61	7620467	59	9410285	33
7420042	50	7430285	37	7620406	61	7620468	59	9410285	35
7420183	33	7430285	41	7620407	61	7620469	59	9410285	37
7420230	39	7430285	41	7620408	61	7620470	59	9410309	41
7420244	33	7430286	41	7620409	61	7620470	59	9410333	35
7430221	33	7430287	41	7620410	61	7620471	59	9410333	37
7430253	11	7620271	57	7620411	61	7620472	59	9410335	35
7430254	11	7620352	60	7620412	61	7620473	59	9410337	35
7430255	11	7620353	60	7620413	61	7620474	59	9410337	37
7430256	11	7620354	60	7620414	61	7620476	59	9410359	41
7430257	11	7620355	59	7620415	61	7620477	59	9410361	41
7430258	11	7620355	60	7620416	61	7620478	63	9410977	35
7430259	11	7620356	60	7620417	61	7620479	59	9410977	37
7430260	11	7620357	60	7620418	63	7620480	59	9410977	41
7430261	11	7620358	60	7620419	63	7620481	59	9410977	45
7430263	35	7620359	60	7620420	63	7620482	59	9410979	32
7430263	35	7620360	60	7620421	63	7620483	59	9410979	35
7430263	37	7620361	60	7620422	63	7620484	59	9411010	43
7430263	37	7620362	60	7620423	63	7620485	59	9411027	23
7430270	35	7620363	60	7620424	63	7620486	59	9411027	26
7430270	37	7620364	60	7620425	63	7620487	59	9411027	29
7430270	41	7620365	60	7620426	63	7620488	59	9411027	31
7430271	35	7620366	60	7620427	63	7620489	59	9411027	39
7430271	37	7620367	60	7620428	63	7620490	59	9411027	52
7430272	35	7620368	60	7620429	63	7620491	59	9411400	47
7430272	37	7620369	60	7620430	63	7620492	59	9411638	54
7430273	35	7620370	60	7620431	63	7620493	59	9411721	52
7430273	37	7620371	60	7620432	63	7620494	59	9411727	29
7430274	35	7620372	60	7620433	63	7620495	59	9411727	31
7430274	37	7620373	60	7620434	63	7620496	59	9411727	43
7430275	35	7620374	60	7620435	63	7620497	59	9411727	58
7430275	35	7620375	60	7620436	63	7620498	59	9413946	23
7430275	37	7620376	60	7620437	63	7620499	59	9413946	29
7430275	37	7620377	60	7620438	63	7620500	59	9413946	31
7430276	35	7620378	60	7620439	63	7620501	59	9413946	55
7430276	37	7620379	60	7620440	63	7620502	59	9413947	45
7430276	41	7620380	60	7620441	63	7620503	59	9422850	47
7430277	35	7620381	60	7620442	63	7620504	59	AH142404	15
7430277	37	7620382	60	7620443	63	7620504	60	AH99409	15
7430277	41	7620383	60	7620444	63	7620505	59	K5573AB	48
7430278	35	7620384	60	7620445	63	7620506	59	K5573AC	48
7430278	37	7620385	60	7620446	63	7620507	60	Q6602192	35
7430278	41	7620386	60	7620447	63	7620508	61	Q6602192	37
7430279	35	7620387	60	7620448	63	9402709	44	Q6602192	39
7430279	37	7620388	60	7620449	63	9402709	45		
7430279	41	7620389	60	7620450	63	9402713	47		
7430280	35	7620390	60	7620451	63	9410200	33		
7430280	37	7620391	60	7620452	63	9410200	35		
7430280	41	7620392	61	7620453	63	9410200	37		
7430281	35	7620393	61	7620454	63	9410200	41		
7430281	37	7620394	61	7620455	63	9410203	35		
7430281	41	7620395	61	7620456	62	9410203	37		
7430282	35	7620396	61	7620457	61	9410205	35		
7430282	37	7620397	61	7620458	61	9410205	37		
7430282	41	7620398	61	7620459	61	9410207	33		
7430283	35	7620399	61	7620460	61	9410207	35		
7430283	37	7620400	61	7620461	61	9410207	37		
7430283	41	7620401	61	7620462	61	9410281	35		
7430284	35	7620402	61	7620463	61	9410281	37		
7430284	37	7620403	61	7620464	61	9410283	35		

Something Wrong with this manual?

If you find inaccurate or confusing information in this manual, or just have a suggestion for improvement, please let us know.

Email this form to us at: sales@etnyre.com • www.etnyre.com

Mail or FAX this form to us at: E. D. ETNYRE & CO. 1333 S. Daysville Rd. Oregon, Illinois 61061 • Fax: 800-521-1107 • www.etnyre.com
Attn: Service Manager

COMMENT FORM

Recommended changes from: _____

Address _____

City, State, Zip _____

Phone _____

Date Sent _____

Manual Number (upper right corner of front cover) _____

Manual Title _____

Explain the problem in the space below.

Page Number	Reference Number	Paragraph Number	Figure Number	Problem (please be specific)